LEEDON RESIDENCE

GARDEN SUITE
5 BEDROOM
TYPE 5A-P1

610 sqm / 6,566 sqft

unit 01-23

Mirror Unit
unit 01-25

Upper Level

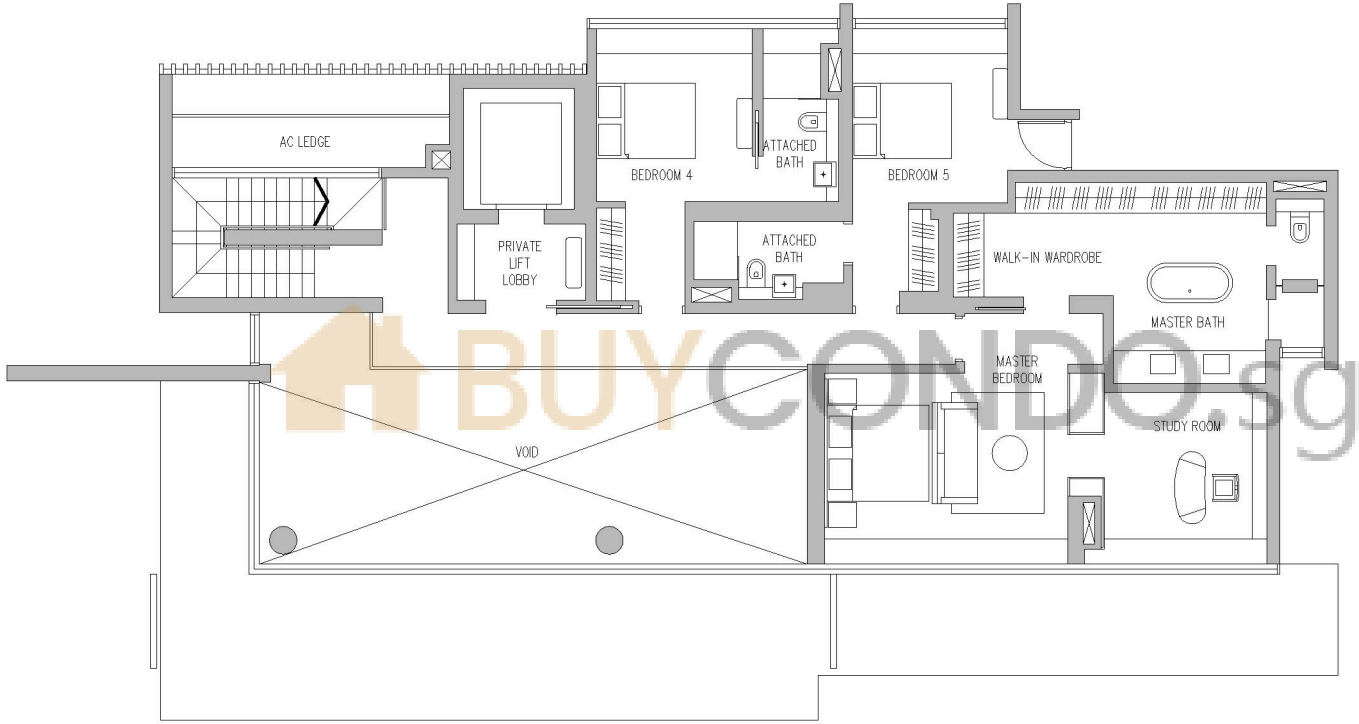

BUYCONDO.sg

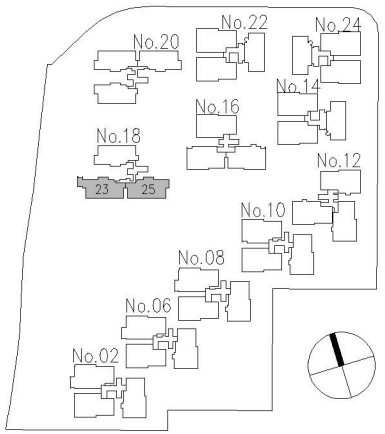

0 1m 2m 5m 10m

BUILDING PLAN REF : A1387-00356-2007-BP01, A1387-00356-2007-BP02, A1387-00356-2007-BP03, A1387-00356-2007-BP04
APRROVAL DATE : 19/04/2011, 25/01/2012, 12/06/2012, 17/12/2013

All areas stated herein include pes, water feature (private pool), private lobby, bay windows, a/c ledges, planters, balconies, roof terraces, outdoor shower and voids where applicable.
All areas and measurements stated herein are approximate and subject to adjustment on final survey. Layout / location of wardrobes, kitchen cabinets, fan coil units, electrical points, door swing positions and plaster ceiling boards are subject to Architect' s sole discretion and final design.

LEEDON RESIDENCE

GARDEN SUITE
5 BEDROOM
TYPE 5A-P2

649 sqm / 6,986 sqft

unit 01-24

Mirror Unit
unit 01-27

Lower Level

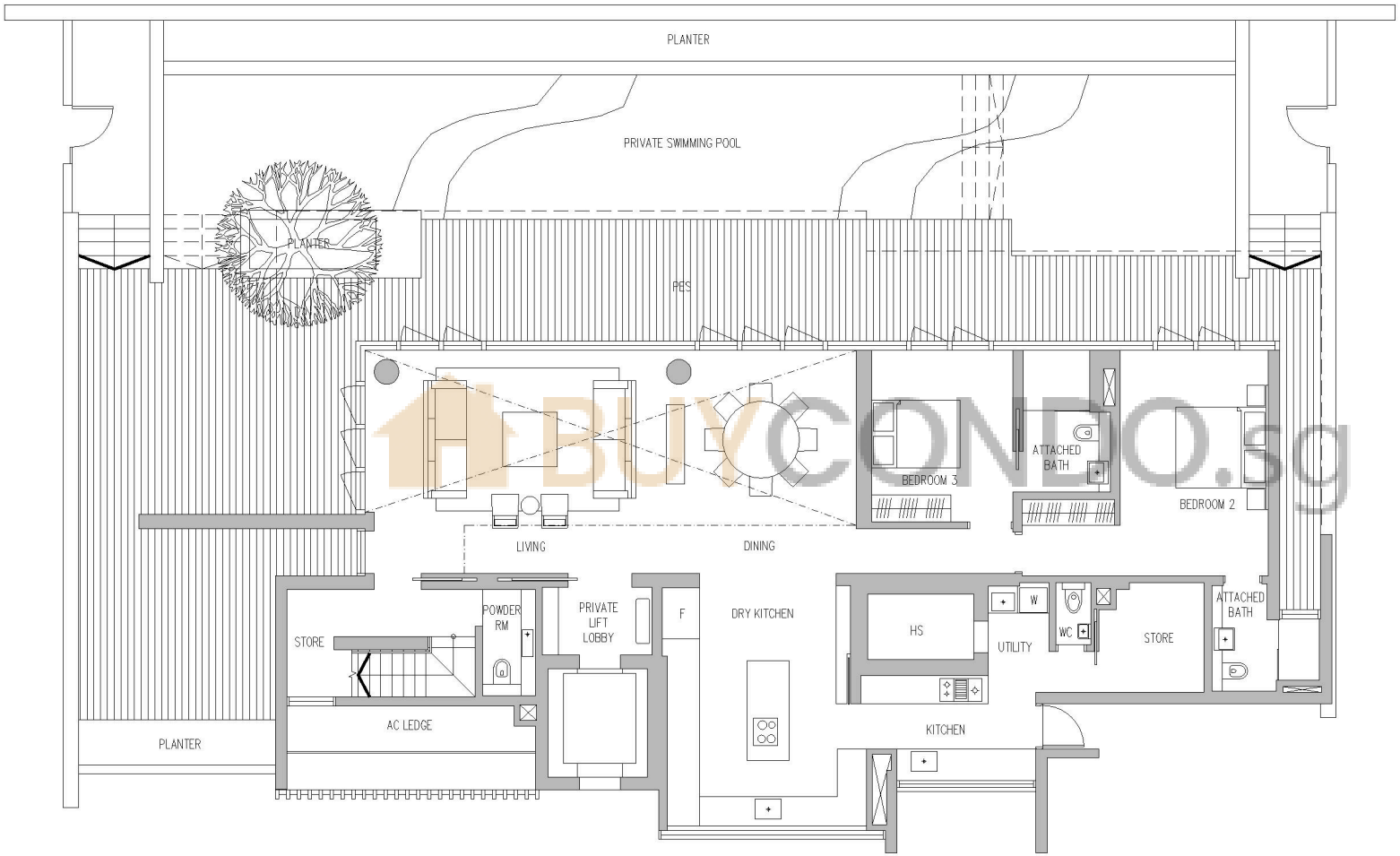

BUYCONDO.sg

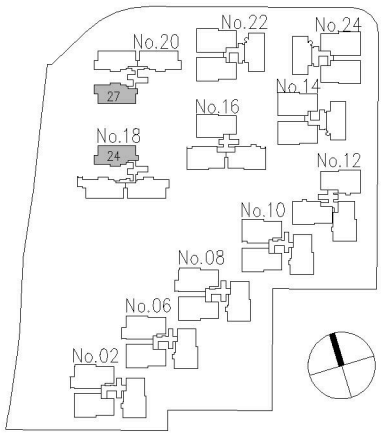

0 1m 2m 5m 10m

BUILDING PLAN REF : A1387-00356-2007-BP01, A1387-00356-2007-BP02, A1387-00356-2007-BP03, A1387-00356-2007-BP04
APRROVAL DATE : 19/04/2011, 25/01/2012, 12/06/2012, 17/12/2013

All areas stated herein include pes, water feature (private pool), private lobby, bay windows, a/c ledges, planters, balconies, roof terraces, outdoor shower and voids where applicable.
All areas and measurements stated herein are approximate and subject to adjustment on final survey. Layout / location of wardrobes, kitchen cabinets, fan coil units, electrical points, door swing positions and plaster ceiling boards are subject to Architect' s sole discretion and final design.

LEEDON RESIDENCE

GARDEN SUITE
5 BEDROOM
TYPE 5A-P2

649 sqm / 6,986 sqft

unit 01-24

Mirror Unit
unit 01-27

Upper Level

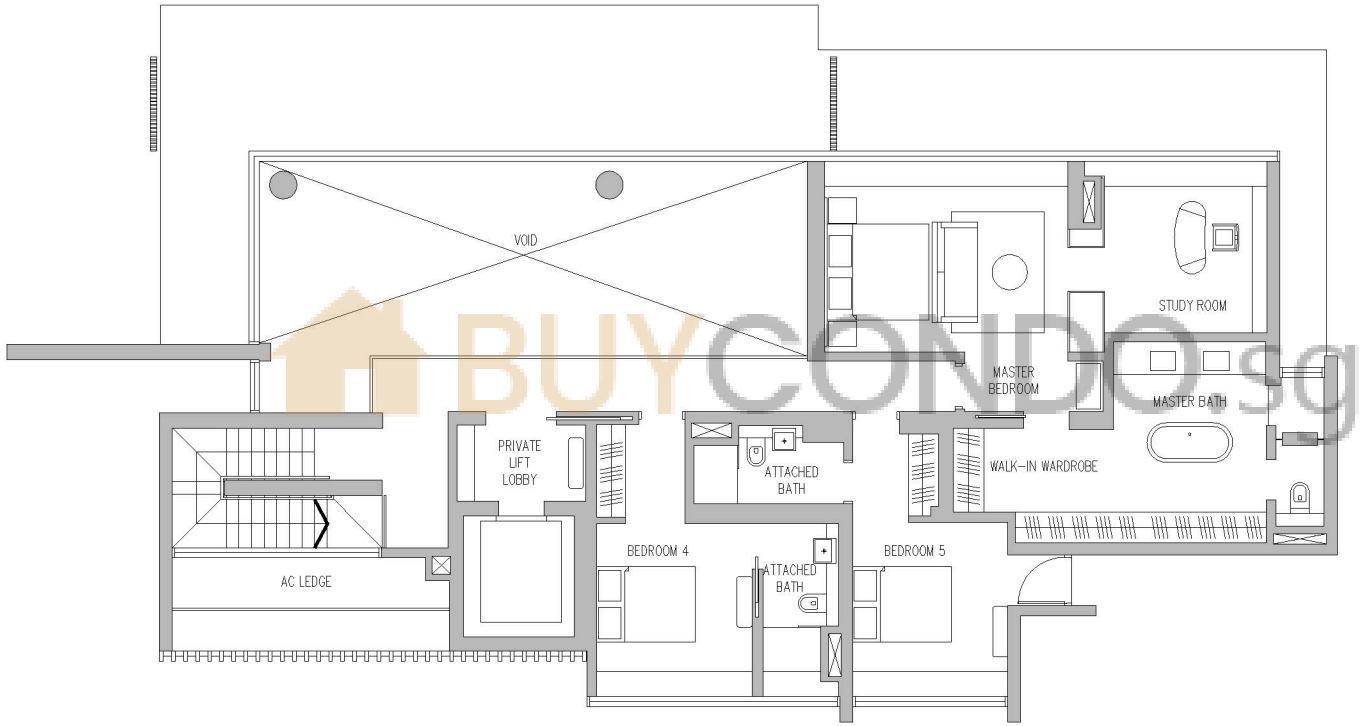

BUYCONDO.sg

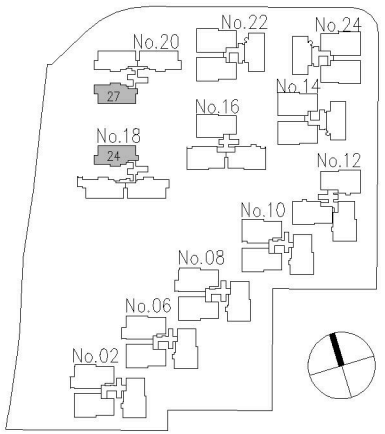

0 1m 2m 5m 10m

BUILDING PLAN REF : A1387-00356-2007-BP01, A1387-00356-2007-BP02, A1387-00356-2007-BP03, A1387-00356-2007-BP04
APRROVAL DATE : 19/04/2011, 25/01/2012, 12/06/2012, 17/12/2013

All areas stated herein include pes, water feature (private pool), private lobby, bay windows, a/c ledges, planters, balconies, roof terraces, outdoor shower and voids where applicable.
All areas and measurements stated herein are approximate and subject to adjustment on final survey. Layout / location of wardrobes, kitchen cabinets, fan coil units, electrical points, door swing positions and plaster ceiling boards are subject to Architect' s sole discretion and final design.

LEEDON RESIDENCE

GARDEN SUITE
5 BEDROOM
TYPE 5A-P3

748 sqm / 8,051 sqft

unit 01-28

Lower Level

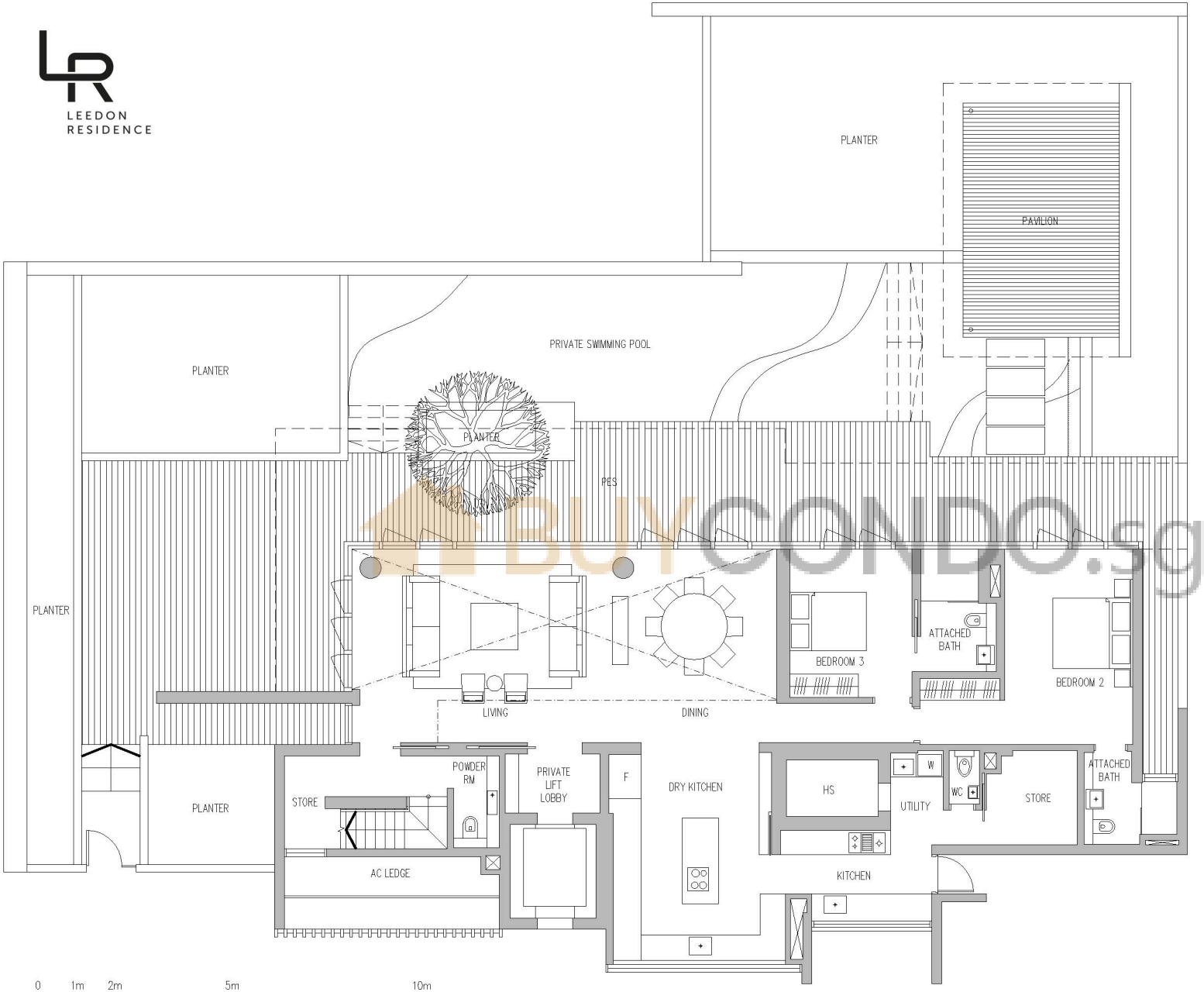

BUYCONDO.sg

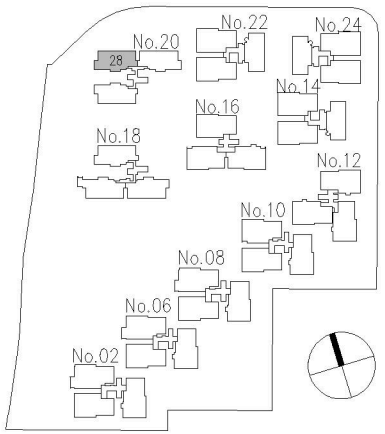

0 1m 2m 5m 10m

BUILDING PLAN REF : A1387-00356-2007-BP01, A1387-00356-2007-BP02, A1387-00356-2007-BP03, A1387-00356-2007-BP04
APRROVAL DATE : 19/04/2011, 25/01/2012, 12/06/2012, 17/12/2013

All areas stated herein include pes, water feature (private pool), private lobby, bay windows, a/c ledges, planters, balconies, roof terraces, outdoor shower and voids where applicable.
All areas and measurements stated herein are approximate and subject to adjustment on final survey. Layout / location of wardrobes, kitchen cabinets, fan coil units, electrical points, door swing positions and plaster ceiling boards are subject to Architect' s sole discretion and final design.

LEEDON RESIDENCE

GARDEN SUITE
5 BEDROOM
TYPE 5A-P3

748 sqm / 8,051 sqft

unit 01-28

Upper Level

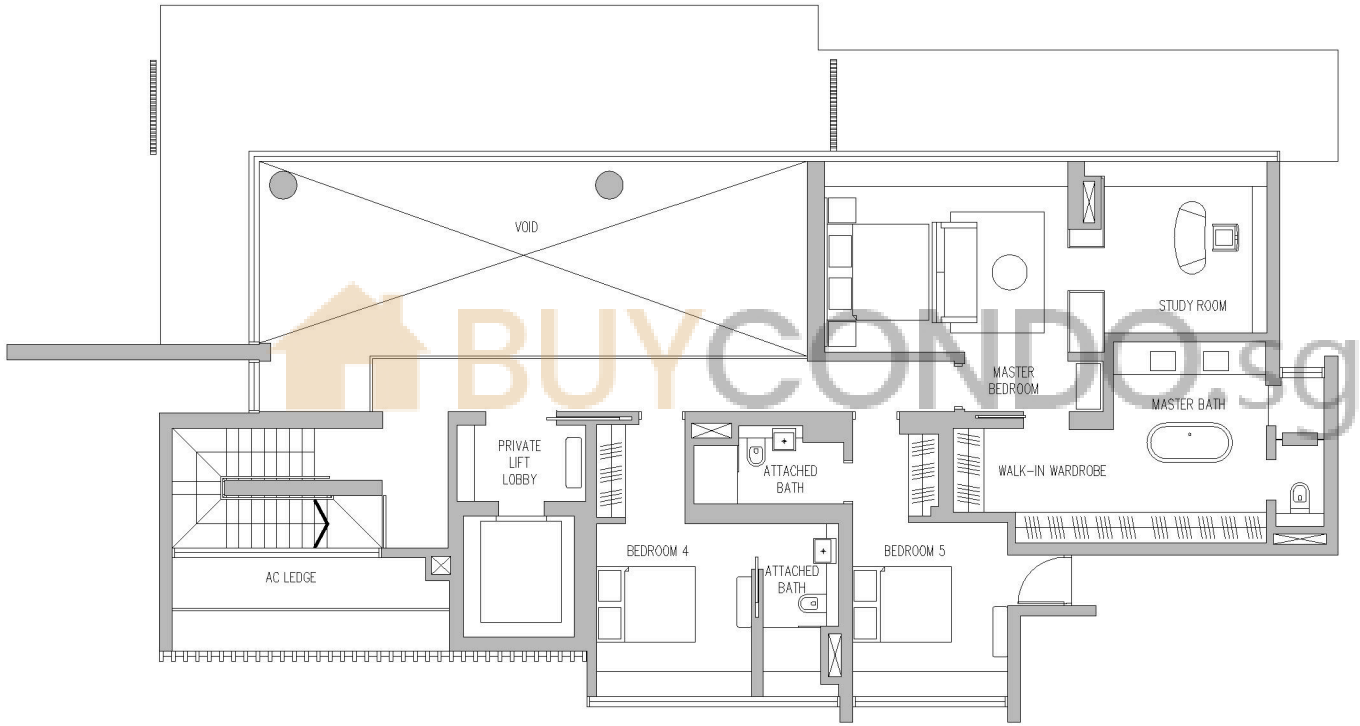

BUYCONDO.sg

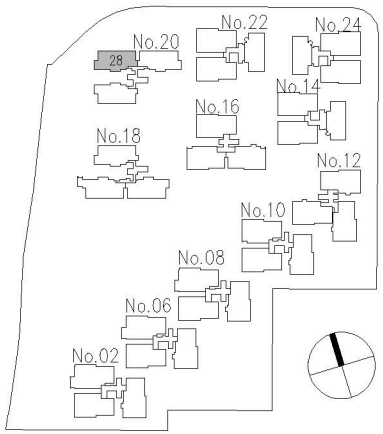

0 1m 2m 5m 10m

BUILDING PLAN REF : A1387-00356-2007-BP01, A1387-00356-2007-BP02, A1387-00356-2007-BP03, A1387-00356-2007-BP04
APRROVAL DATE : 19/04/2011, 25/01/2012, 12/06/2012, 17/12/2013

All areas stated herein include pes, water feature (private pool), private lobby, bay windows, a/c ledges, planters, balconies, roof terraces, outdoor shower and voids where applicable.
All areas and measurements stated herein are approximate and subject to adjustment on final survey. Layout / location of wardrobes, kitchen cabinets, fan coil units, electrical points, door swing positions and plaster ceiling boards are subject to Architect' s sole discretion and final design.

LEEDON RESIDENCE

GARDEN SUITE
5 BEDROOM
TYPE 5A-P4

742 sqm / 7,987 sqft

unit 01-26

Lower Level

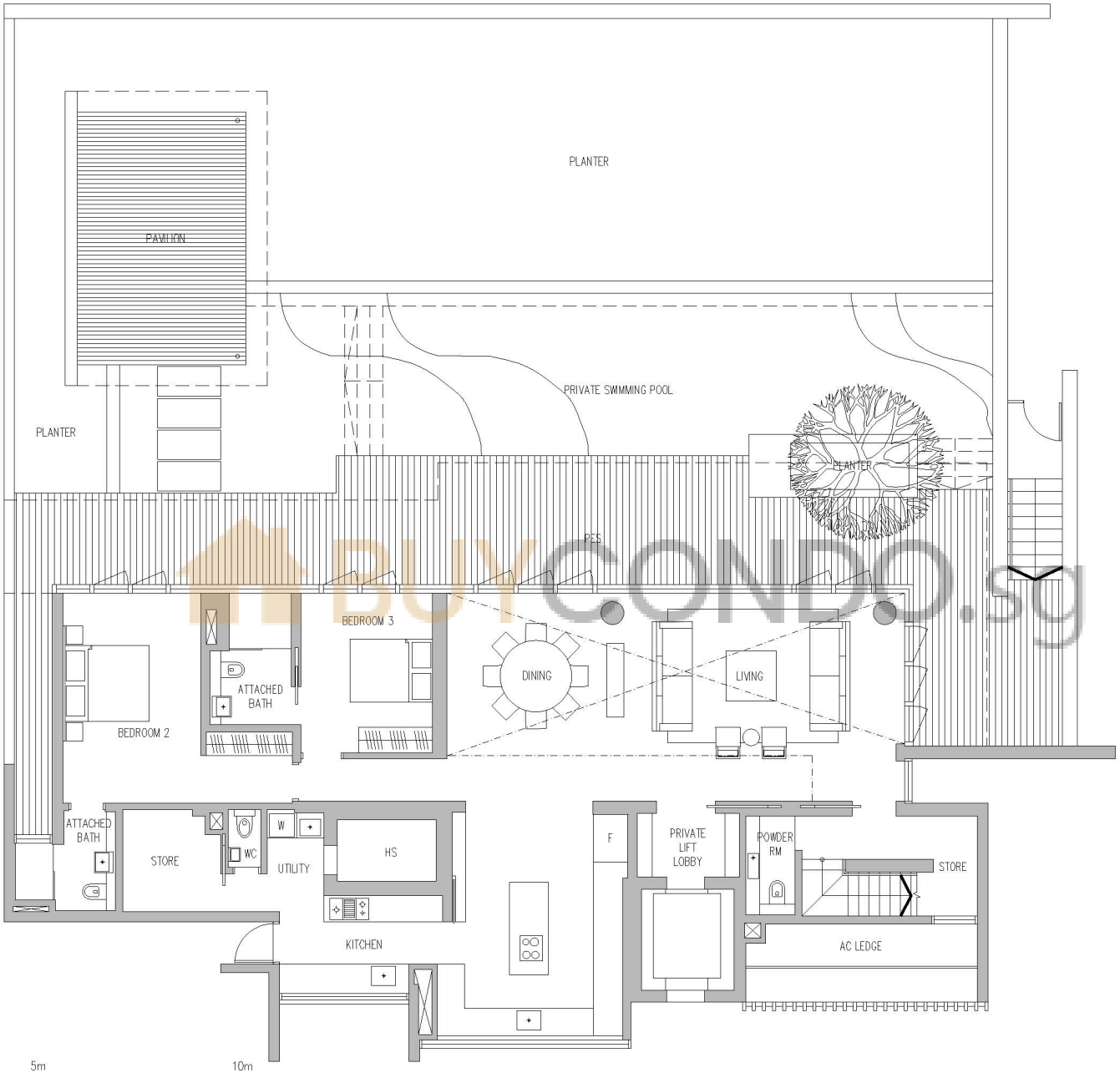

BUYCONDO.sg

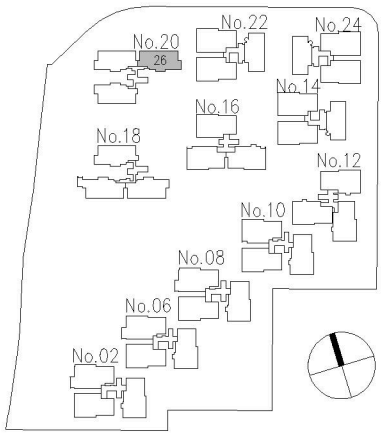

0 1m 2m 5m 10m

BUILDING PLAN REF : A1387-00356-2007-BP01, A1387-00356-2007-BP02, A1387-00356-2007-BP03, A1387-00356-2007-BP04
APRROVAL DATE : 19/04/2011, 25/01/2012, 12/06/2012, 17/12/2013

All areas stated herein include pes, water feature (private pool), private lobby, bay windows, a/c ledges, planters, balconies, roof terraces, outdoor shower and voids where applicable.
All areas and measurements stated herein are approximate and subject to adjustment on final survey. Layout / location of wardrobes, kitchen cabinets, fan coil units, electrical points, door swing positions and plaster ceiling boards are subject to Architect' s sole discretion and final design.

LEEDON RESIDENCE

GARDEN SUITE
5 BEDROOM
TYPE 5A-P4

742 sqm / 7,987 sqft

unit 01-26

Upper Level

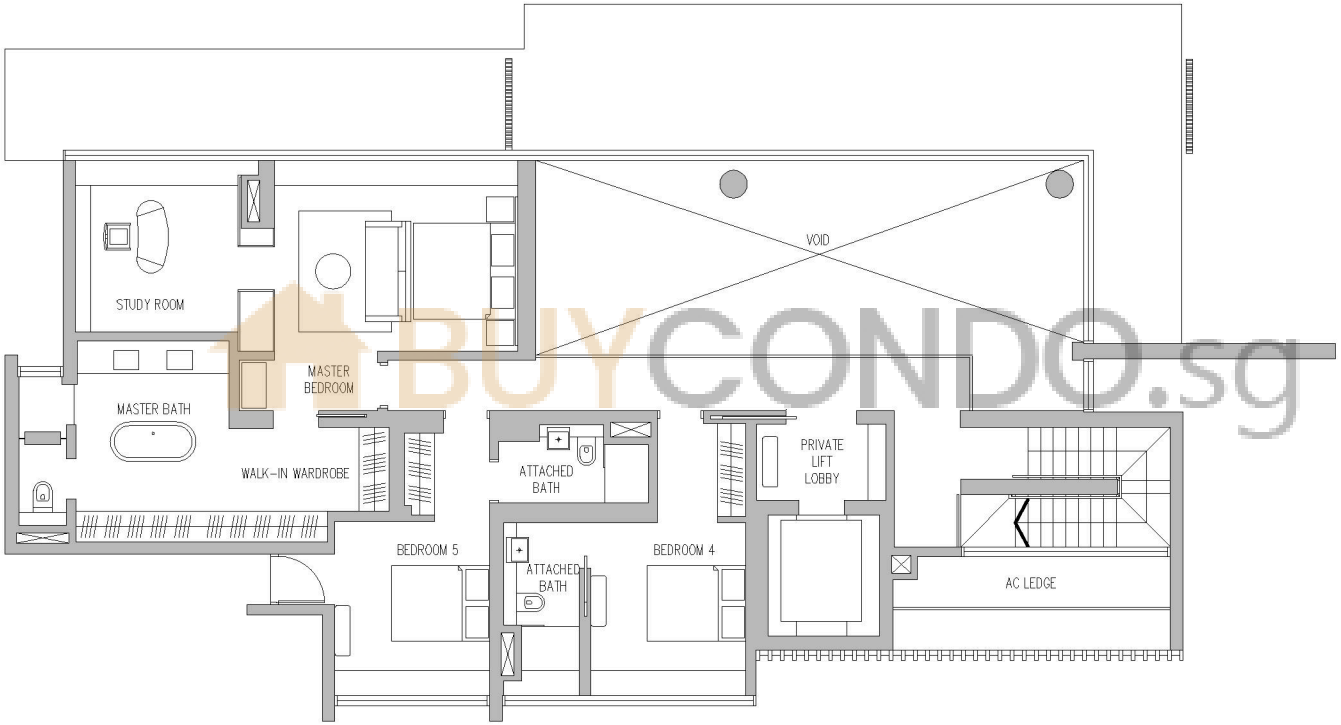

BUYCONDO.sg

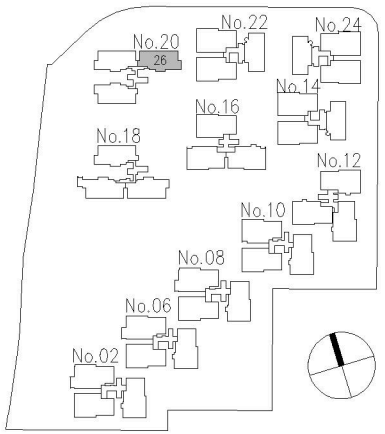

0 1m 2m 5m 10m

BUILDING PLAN REF : A1387-00356-2007-BP01, A1387-00356-2007-BP02, A1387-00356-2007-BP03, A1387-00356-2007-BP04
APRROVAL DATE : 19/04/2011, 25/01/2012, 12/06/2012, 17/12/2013

All areas stated herein include pes, water feature (private pool), private lobby, bay windows, a/c ledges, planters, balconies, roof terraces, outdoor shower and voids where applicable.
All areas and measurements stated herein are approximate and subject to adjustment on final survey. Layout / location of wardrobes, kitchen cabinets, fan coil units, electrical points, door swing positions and plaster ceiling boards are subject to Architect' s sole discretion and final design.

LEEDON RESIDENCE

2 BEDROOM TYPE 2A

97 sqm / 1,044 sqft

unit 02-17 / 30 / 36
unit 03-17 / 30 / 36
unit 04-17 / 30 / 36
unit 05-17 / 30 / 36
unit 06-17 / 30 / 36
unit 07-17 / 30 / 36
unit 08-17 / 30 / 36
unit 09-17 / 30 / 36
unit 10-17 / 30 / 36

Mirror Unit
unit 02-16 / 29 / 35
unit 03-16 / 29 / 35
unit 04-16 / 29 / 35
unit 05-16 / 29 / 35
unit 06-16 / 29 / 35
unit 07-16 / 29 / 35
unit 08-16 / 29 / 35
unit 09-16 / 29 / 35
unit 10-16 / 29 / 35

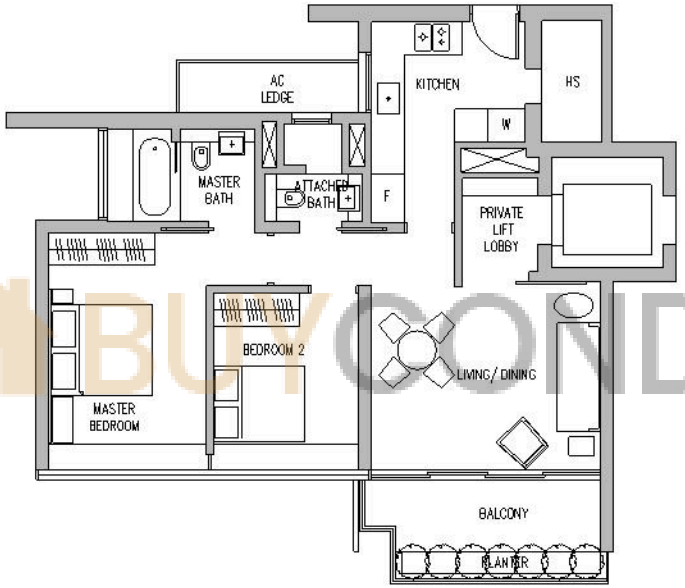

BUYCONDO.sg

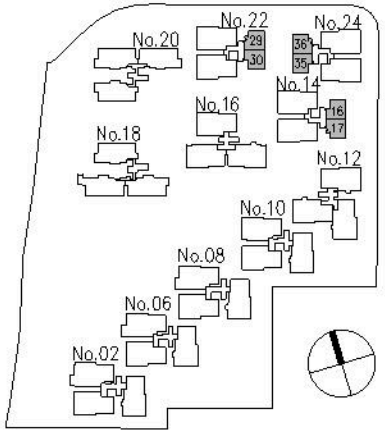

0 1m 2m 5m 10m

BUILDING PLAN REF : A1387-00356-2007-BP01, A1387-00356-2007-BP02, A1387-00356-2007-BP03, A1387-00356-2007-BP04
APRROVAL DATE : 19/04/2011, 25/01/2012, 12/06/2012, 17/12/2013

All areas stated herein include pes, water feature (private pool), private lobby, bay windows, a/c ledges, planters, balconies, roof terraces, outdoor shower and voids where applicable.
All areas and measurements stated herein are approximate and subject to adjustment on final survey. Layout / location of wardrobes, kitchen cabinets, fan coil units, electrical points, door swing positions and plaster ceiling boards are subject to Architect' s sole discretion and final design.

LEEDON RESIDENCE

3 BEDROOM
TYPE 3A-1

198 sqm / 2,131 sqft

unit 02-02 / 05 / 08 / 11 / 19 / 32 / 34

Mirror Unit
unit 02-01/ 18 / 31 / 33

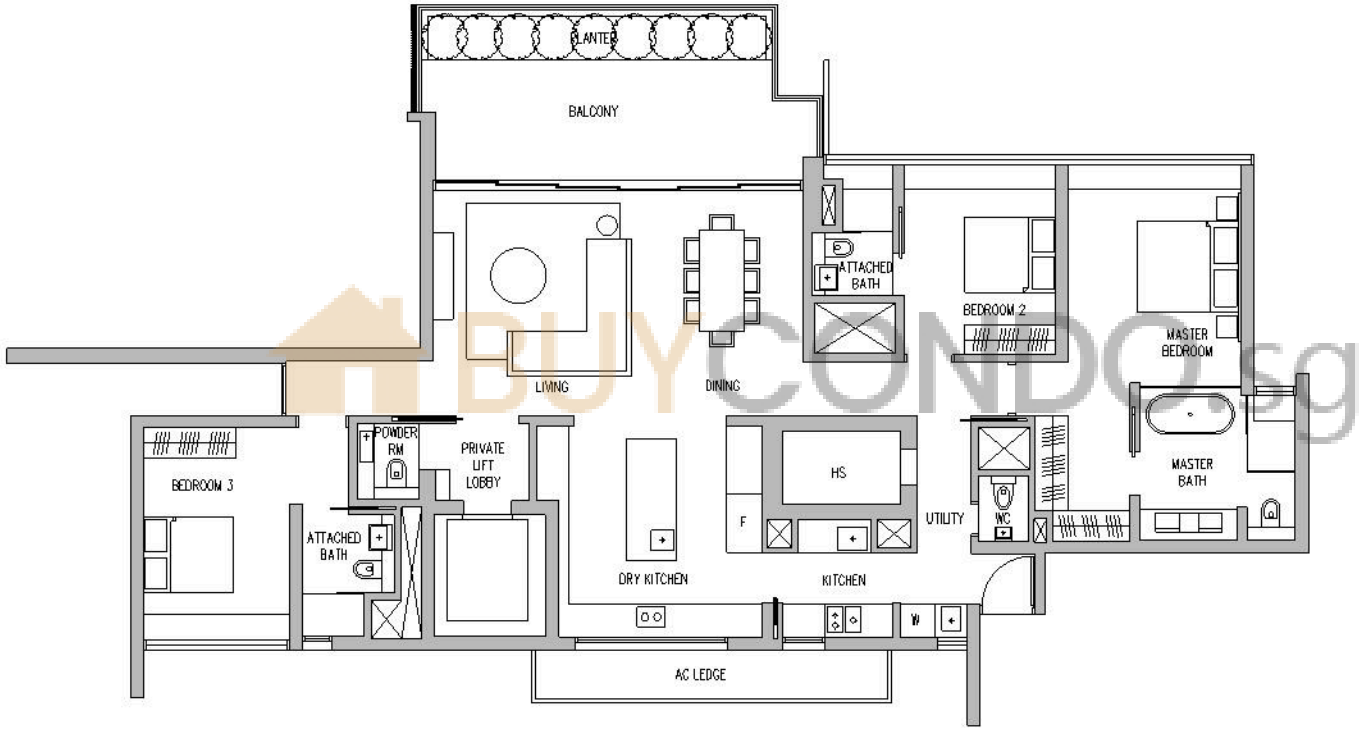

BUYCONDO.sg

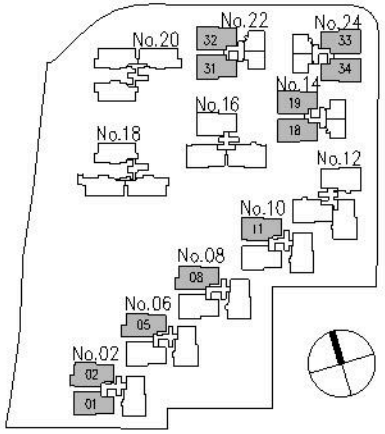

0 1m 2m 5m 10m

BUILDING PLAN REF : A1387-00356-2007-BP01, A1387-00356-2007-BP02, A1387-00356-2007-BP03, A1387-00356-2007-BP04
APRROVAL DATE : 19/04/2011, 25/01/2012, 12/06/2012, 17/12/2013

All areas stated herein include pes, water feature (private pool), private lobby, bay windows, a/c ledges, planters, balconies, roof terraces, outdoor shower and voids where applicable.
All areas and measurements stated herein are approximate and subject to adjustment on final survey. Layout / location of wardrobes, kitchen cabinets, fan coil units, electrical points, door swing positions and plaster ceiling boards are subject to Architect' s sole discretion and final design.

LEEDON RESIDENCE

3 BEDROOM
TYPE 3A

198 sqm / 2,131 sqft

unit 04-02 / 05 / 08 / 11 / 19 / 32 / 34
unit 06-02 / 05 / 08 / 11 / 19 / 32 / 34
unit 08-02 / 05 / 08 / 11 / 19 / 32 / 34
unit 10-02 / 05 / 08 / 11 / 19 / 32 / 34

Mirror Unit
unit 04-01/ 18 / 31 / 33
unit 06-01/ 18 / 31 / 33
unit 08-01/ 18 / 31 / 33
unit 10-01/ 18 / 31 / 33

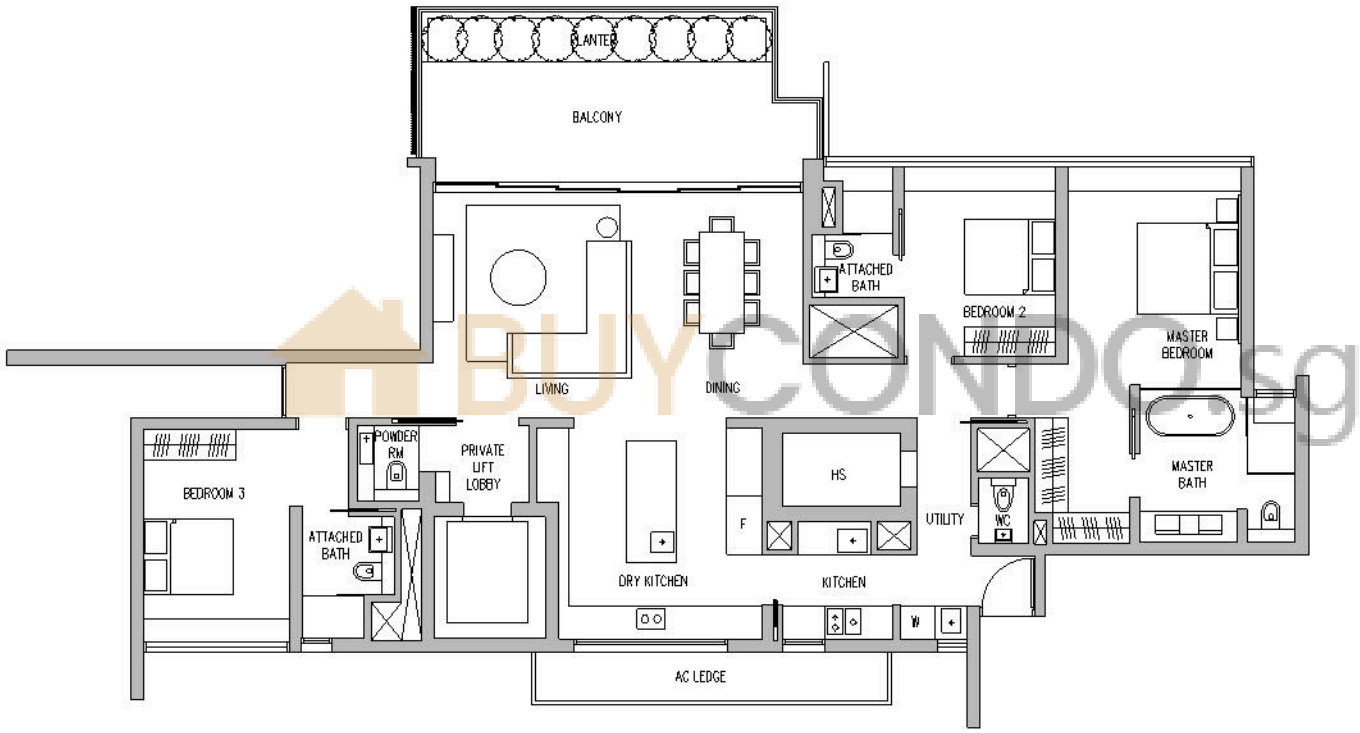

BUYCONDO.sg

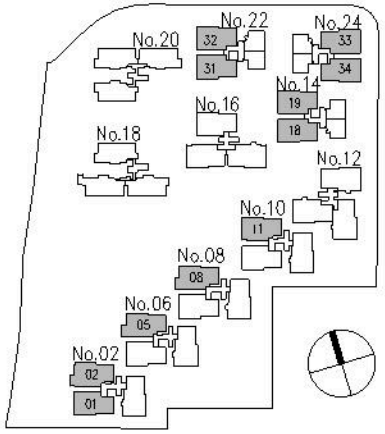

0 1m 2m 5m 10m

BUILDING PLAN REF : A1387-00356-2007-BP01, A1387-00356-2007-BP02, A1387-00356-2007-BP03, A1387-00356-2007-BP04
APRROVAL DATE : 19/04/2011, 25/01/2012, 12/06/2012, 17/12/2013

All areas stated herein include pes, water feature (private pool), private lobby, bay windows, a/c ledges, planters, balconies, roof terraces, outdoor shower and voids where applicable.
All areas and measurements stated herein are approximate and subject to adjustment on final survey. Layout / location of wardrobes, kitchen cabinets, fan coil units, electrical points, door swing positions and plaster ceiling boards are subject to Architect' s sole discretion and final design.

LEEDON RESIDENCE

3 BEDROOM
TYPE 3B-1

196 sqm / 2,110 sqft

unit 02-03/ 06 / 09 / 12 /15

Mirror Unit
unit 02-20

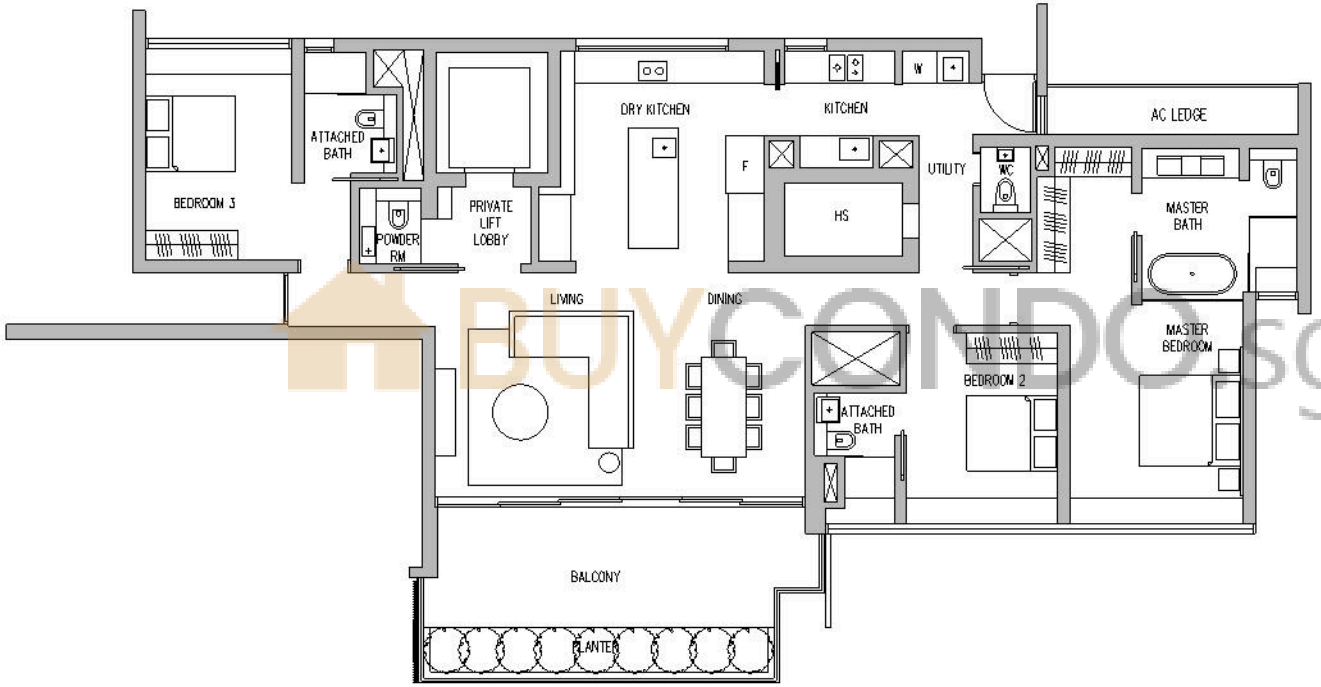

BUYCONDO.sg

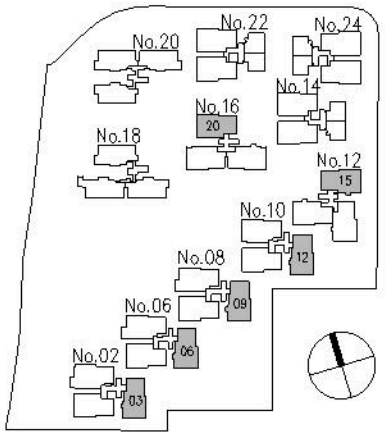

0 1m 2m 5m 10m

BUILDING PLAN REF : A1387-00356-2007-BP01, A1387-00356-2007-BP02, A1387-00356-2007-BP03, A1387-00356-2007-BP04
APRROVAL DATE : 19/04/2011, 25/01/2012, 12/06/2012, 17/12/2013

All areas stated herein include pes, water feature (private pool), private lobby, bay windows, a/c ledges, planters, balconies, roof terraces, outdoor shower and voids where applicable.
All areas and measurements stated herein are approximate and subject to adjustment on final survey. Layout / location of wardrobes, kitchen cabinets, fan coil units, electrical points, door swing positions and plaster ceiling boards are subject to Architect' s sole discretion and final design.

LEEDON RESIDENCE

3 BEDROOM
TYPE 3B

196 sqm / 2,110 sqft

unit 04-03/ 06 / 09 / 12 /15
unit 06-03/ 06 / 09 / 12 /15
unit 08-03/ 06 / 09 / 12 /15
unit 10-03/ 06 / 09 / 12 /15

Mirror Unit
unit 04-20
unit 06-20
unit 08-20
unit 10-20

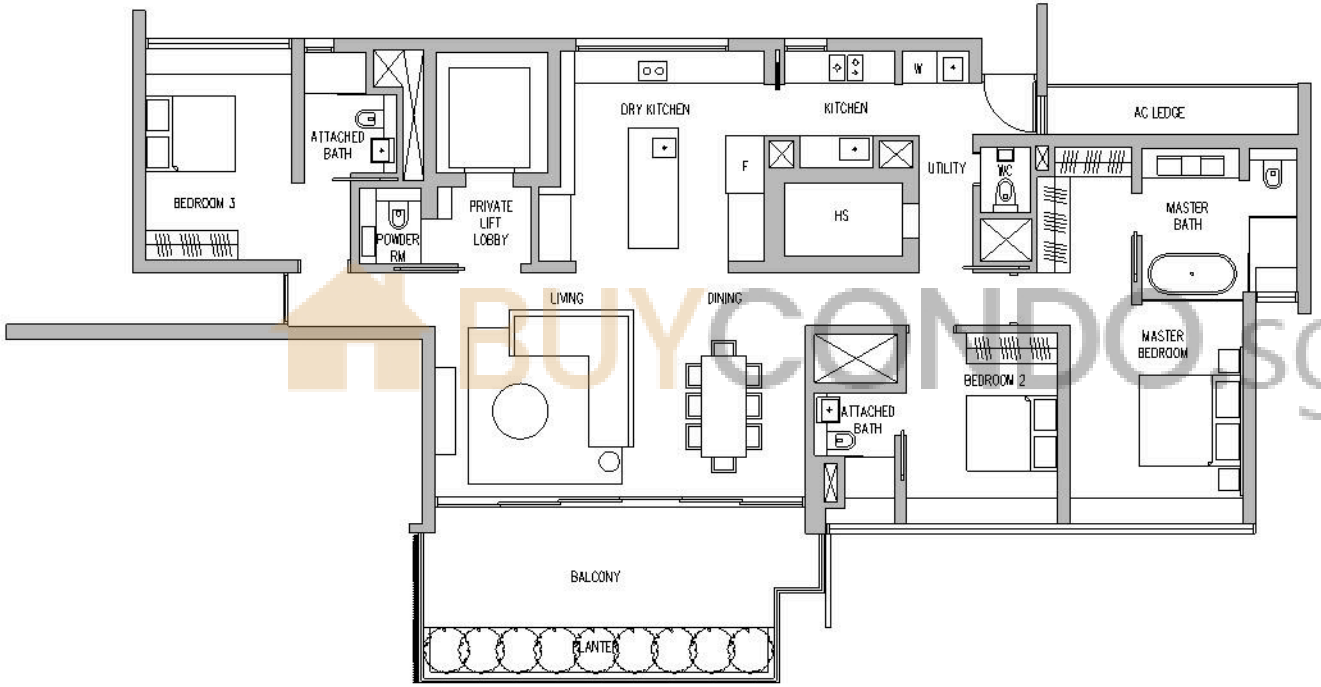

BUYCONDO.sg

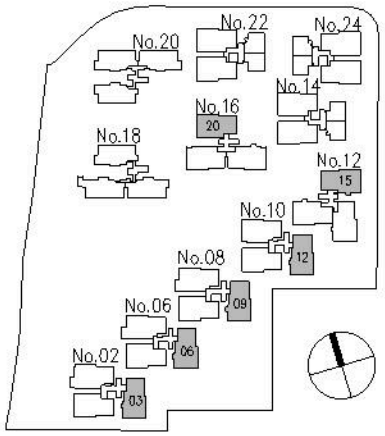

0 1m 2m 5m 10m

BUILDING PLAN REF : A1387-00356-2007-BP01, A1387-00356-2007-BP02, A1387-00356-2007-BP03, A1387-00356-2007-BP04
APRROVAL DATE : 19/04/2011, 25/01/2012, 12/06/2012, 17/12/2013

All areas stated herein include pes, water feature (private pool), private lobby, bay windows, a/c ledges, planters, balconies, roof terraces, outdoor shower and voids where applicable.
All areas and measurements stated herein are approximate and subject to adjustment on final survey. Layout / location of wardrobes, kitchen cabinets, fan coil units, electrical points, door swing positions and plaster ceiling boards are subject to Architect' s sole discretion and final design.

LEEDON RESIDENCE

3 BEDROOM
TYPE 3C-1

196 sqm / 2,110 sqft

unit 02-13 / 22

Mirror Unit
unit 02-21

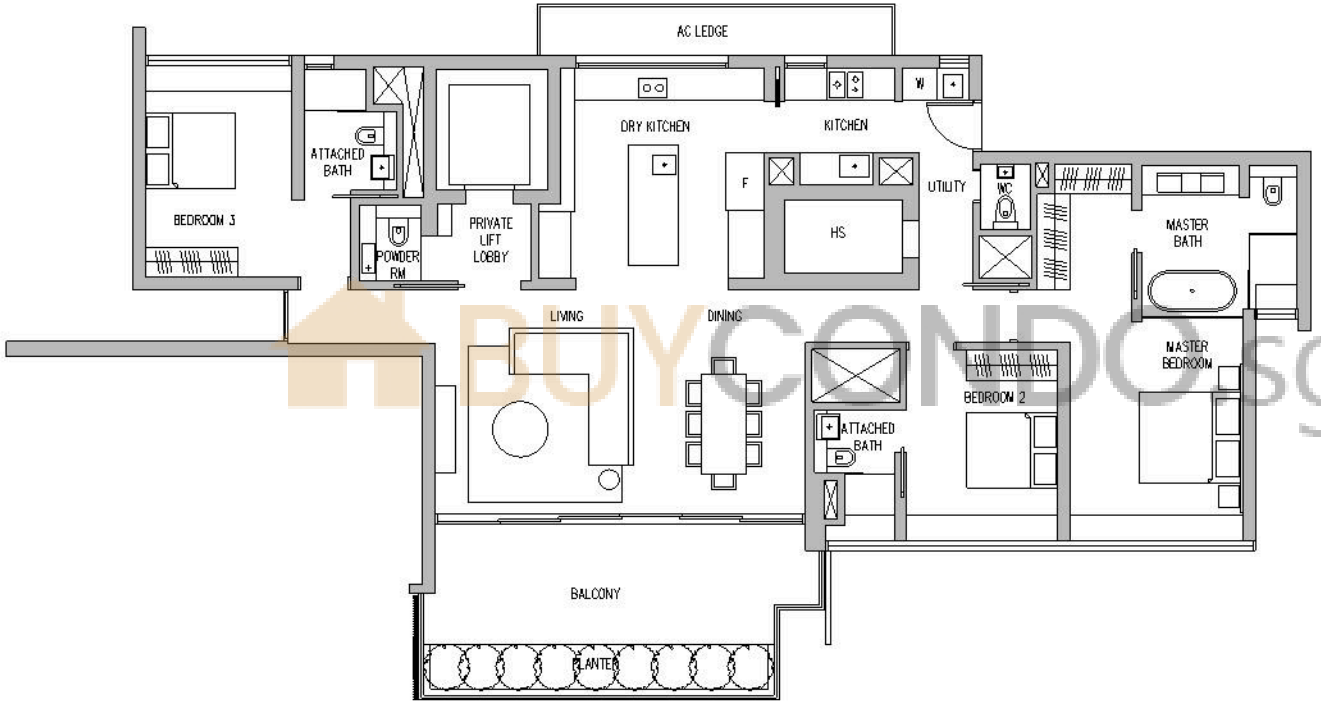

BUYCONDO.sg

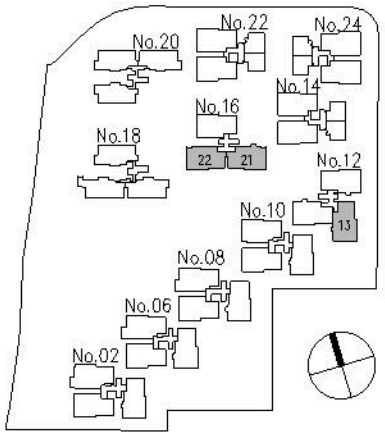

0 1m 2m 5m 10m

BUILDING PLAN REF : A1387-00356-2007-BP01, A1387-00356-2007-BP02, A1387-00356-2007-BP03, A1387-00356-2007-BP04
APRROVAL DATE : 19/04/2011, 25/01/2012, 12/06/2012, 17/12/2013

All areas stated herein include pes, water feature (private pool), private lobby, bay windows, a/c ledges, planters, balconies, roof terraces, outdoor shower and voids where applicable.
All areas and measurements stated herein are approximate and subject to adjustment on final survey. Layout / location of wardrobes, kitchen cabinets, fan coil units, electrical points, door swing positions and plaster ceiling boards are subject to Architect' s sole discretion and final design.

LEEDON RESIDENCE

3 BEDROOM TYPE 3C

196 sqm / 2,110 sqft

unit 04-13 / 22
unit 06-13 / 22
unit 08-13 / 22
unit 10-13 / 22

Mirror Unit
unit 04-21
unit 06-21
unit 08-21
unit 10-21

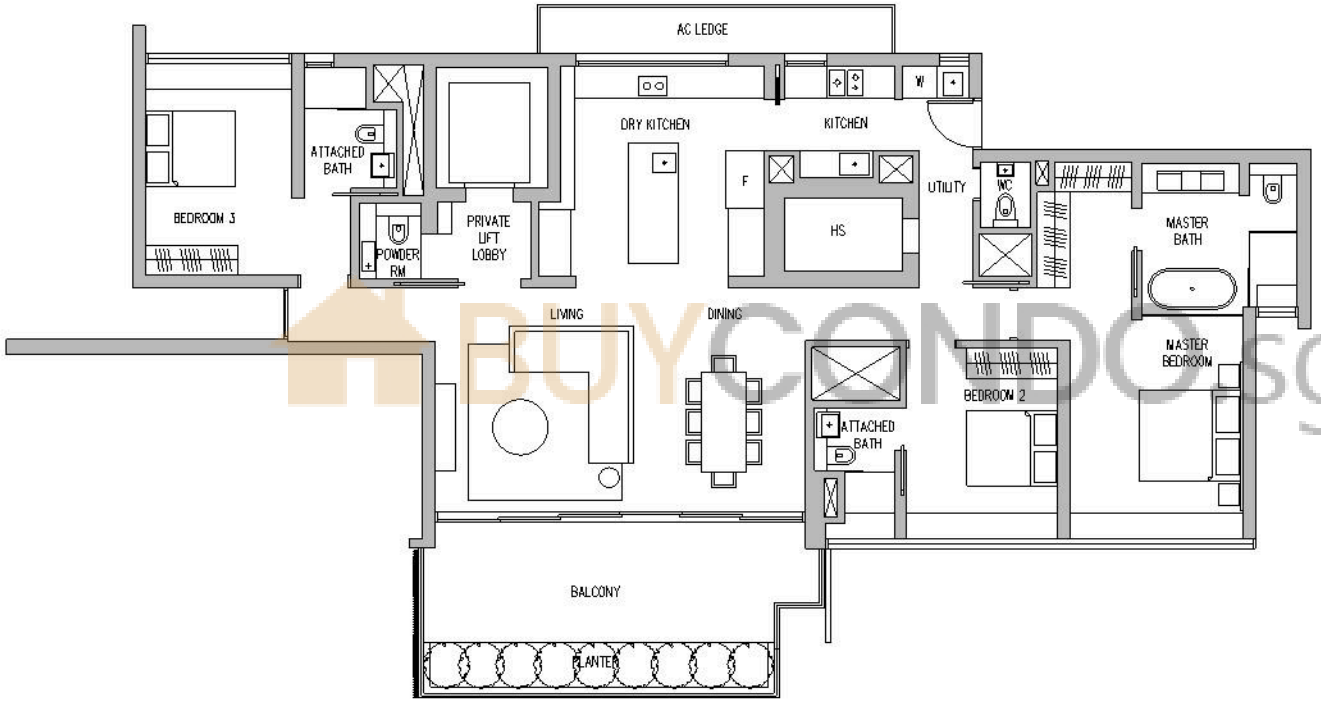

BUYCONDO.sg

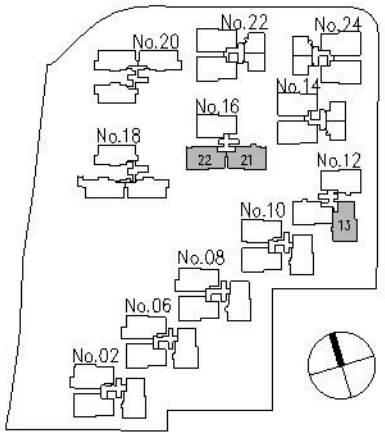

0 1m 2m 5m 10m

BUILDING PLAN REF : A1387-00356-2007-BP01, A1387-00356-2007-BP02, A1387-00356-2007-BP03, A1387-00356-2007-BP04
APRROVAL DATE : 19/04/2011, 25/01/2012, 12/06/2012, 17/12/2013

All areas stated herein include pes, water feature (private pool), private lobby, bay windows, a/c ledges, planters, balconies, roof terraces, outdoor shower and voids where applicable.
All areas and measurements stated herein are approximate and subject to adjustment on final survey. Layout / location of wardrobes, kitchen cabinets, fan coil units, electrical points, door swing positions and plaster ceiling boards are subject to Architect' s sole discretion and final design.

LEEDON RESIDENCE

3 BEDROOM + STUDY
TYPE 3S-H

194 sqm / 2,088 sqft

unit 11-17 / 35

Mirror Unit
unit 11-30

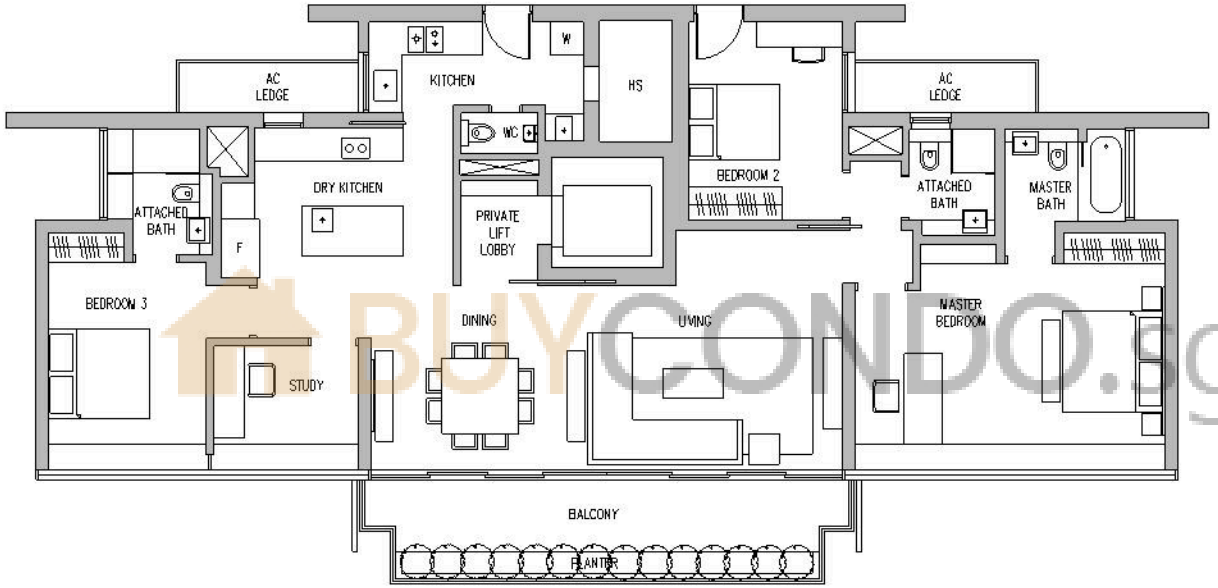

BUYCONDO.sg

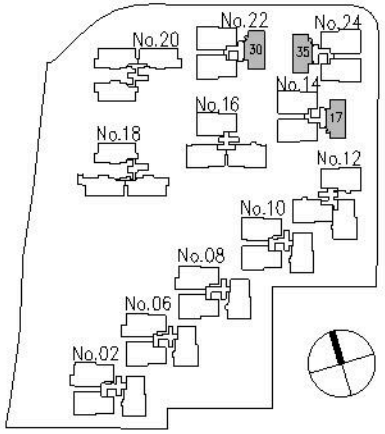

0 1m 2m 5m 10m

BUILDING PLAN REF : A1387-00356-2007-BP01, A1387-00356-2007-BP02, A1387-00356-2007-BP03, A1387-00356-2007-BP04
APRROVAL DATE : 19/04/2011, 25/01/2012, 12/06/2012, 17/12/2013

All areas stated herein include pes, water feature (private pool), private lobby, bay windows, a/c ledges, planters, balconies, roof terraces, outdoor shower and voids where applicable.
All areas and measurements stated herein are approximate and subject to adjustment on final survey. Layout / location of wardrobes, kitchen cabinets, fan coil units, electrical points, door swing positions and plaster ceiling boards are subject to Architect' s sole discretion and final design.

LEEDON RESIDENCE

GARDEN SUITE
3 BEDROOM + STUDY
TYPE 3S-P1

376 sqm / 4,047 sqft

unit 01-17

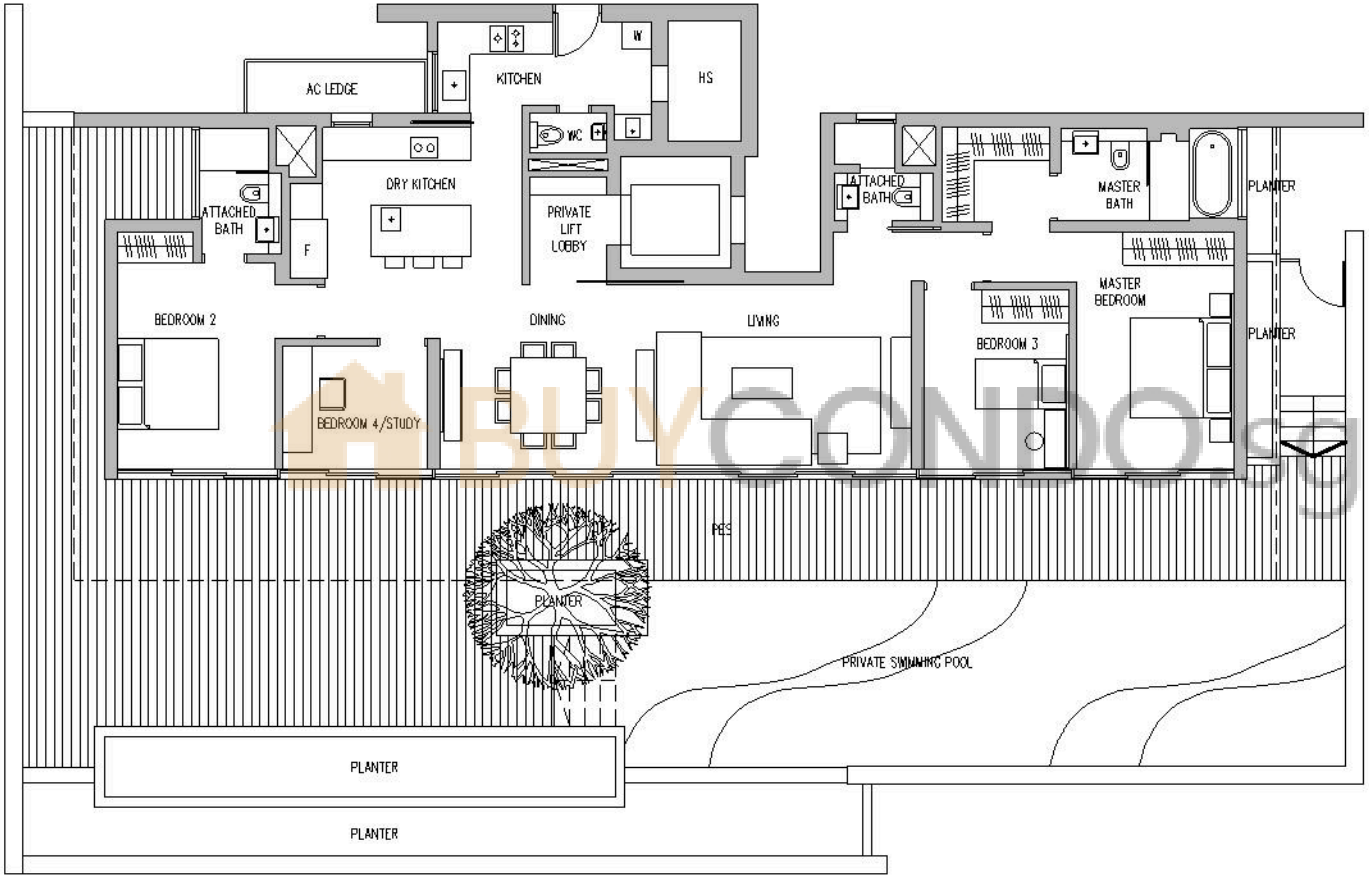

BUYCONDO.sg

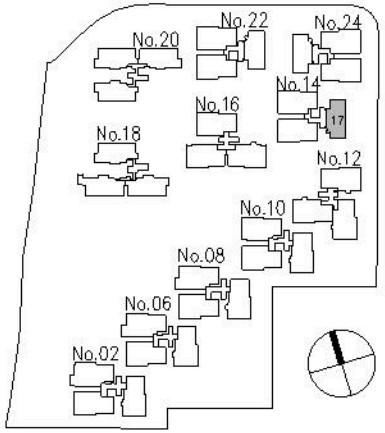

0 1m 2m 5m 10m

BUILDING PLAN REF : A1387-00356-2007-BP01, A1387-00356-2007-BP02, A1387-00356-2007-BP03, A1387-00356-2007-BP04
APRROVAL DATE : 19/04/2011, 25/01/2012, 12/06/2012, 17/12/2013

All areas stated herein include pes, water feature (private pool), private lobby, bay windows, a/c ledges, planters, balconies, roof terraces, outdoor shower and voids where applicable.
All areas and measurements stated herein are approximate and subject to adjustment on final survey. Layout / location of wardrobes, kitchen cabinets, fan coil units, electrical points, door swing positions and plaster ceiling boards are subject to Architect' s sole discretion and final design.

LEEDON RESIDENCE

GARDEN SUITE
3 BEDROOM + STUDY
TYPE 3S-P2

352 sqm / 3,789 sqft

unit 01-30

Mirror Unit
unit 01-35

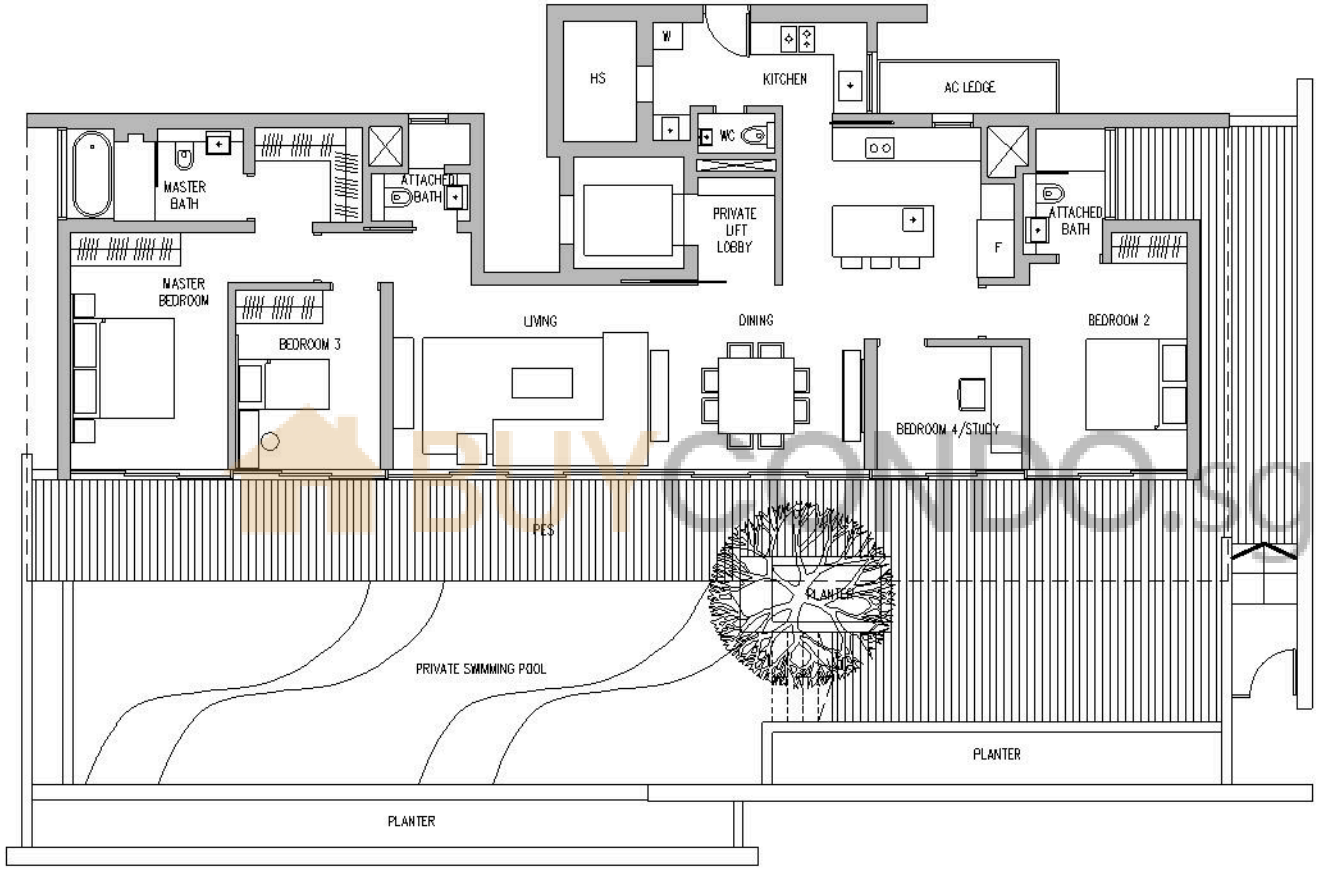

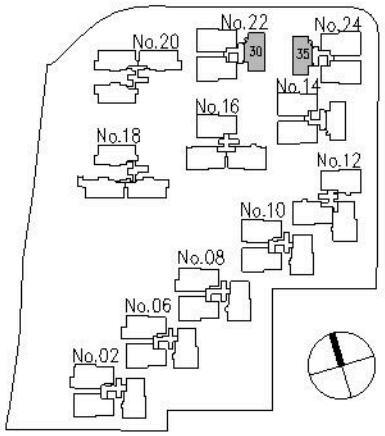

0 1m 2m 5m 10m

BUILDING PLAN REF : A1387-00356-2007-BP01, A1387-00356-2007-BP02, A1387-00356-2007-BP03, A1387-00356-2007-BP04
APRROVAL DATE : 19/04/2011, 25/01/2012, 12/06/2012, 17/12/2013

All areas stated herein include pes, water feature (private pool), private lobby, bay windows, a/c ledges, planters, balconies, roof terraces, outdoor shower and voids where applicable.
All areas and measurements stated herein are approximate and subject to adjustment on final survey. Layout / location of wardrobes, kitchen cabinets, fan coil units, electrical points, door swing positions and plaster ceiling boards are subject to Architect' s sole discretion and final design.

BUYCONDO.SG

LEEDON RESIDENCE

SKY SUITE
3 BEDROOM + STUDY
TYPE 3S-R

305 sqm / 3,283 sqft

unit 12-17 / 35

Mirror Unit
unit 12-30

Lower Level

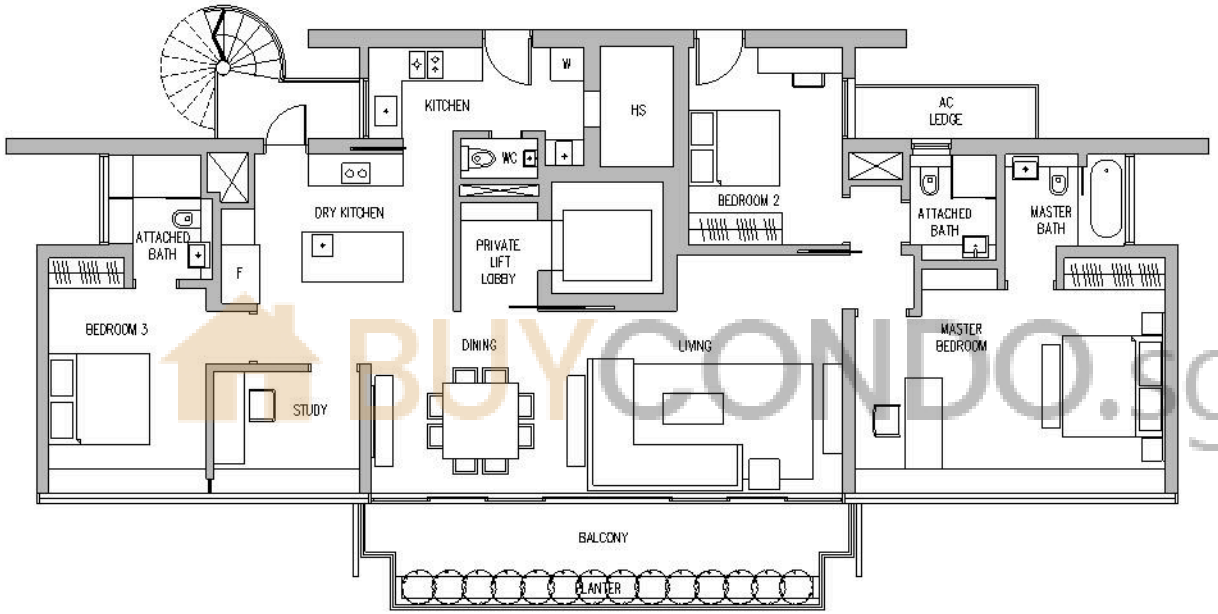

BUYCONDO.sg

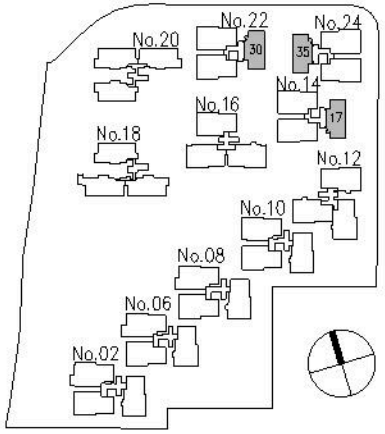

0 1m 2m 5m 10m

BUILDING PLAN REF : A1387-00356-2007-BP01, A1387-00356-2007-BP02, A1387-00356-2007-BP03, A1387-00356-2007-BP04
APRROVAL DATE : 19/04/2011, 25/01/2012, 12/06/2012, 17/12/2013

All areas stated herein include pes, water feature (private pool), private lobby, bay windows, a/c ledges, planters, balconies, roof terraces, outdoor shower and voids where applicable.
All areas and measurements stated herein are approximate and subject to adjustment on final survey. Layout / location of wardrobes, kitchen cabinets, fan coil units, electrical points, door swing positions and plaster ceiling boards are subject to Architect' s sole discretion and final design.

LEEDON RESIDENCE

4 BEDROOM
TYPE 4A-H

233 sqm / 2,508 sqft

unit 11-01 / 18 / 31 / 33

Mirror Unit
unit 11- 19 / 32 / 34

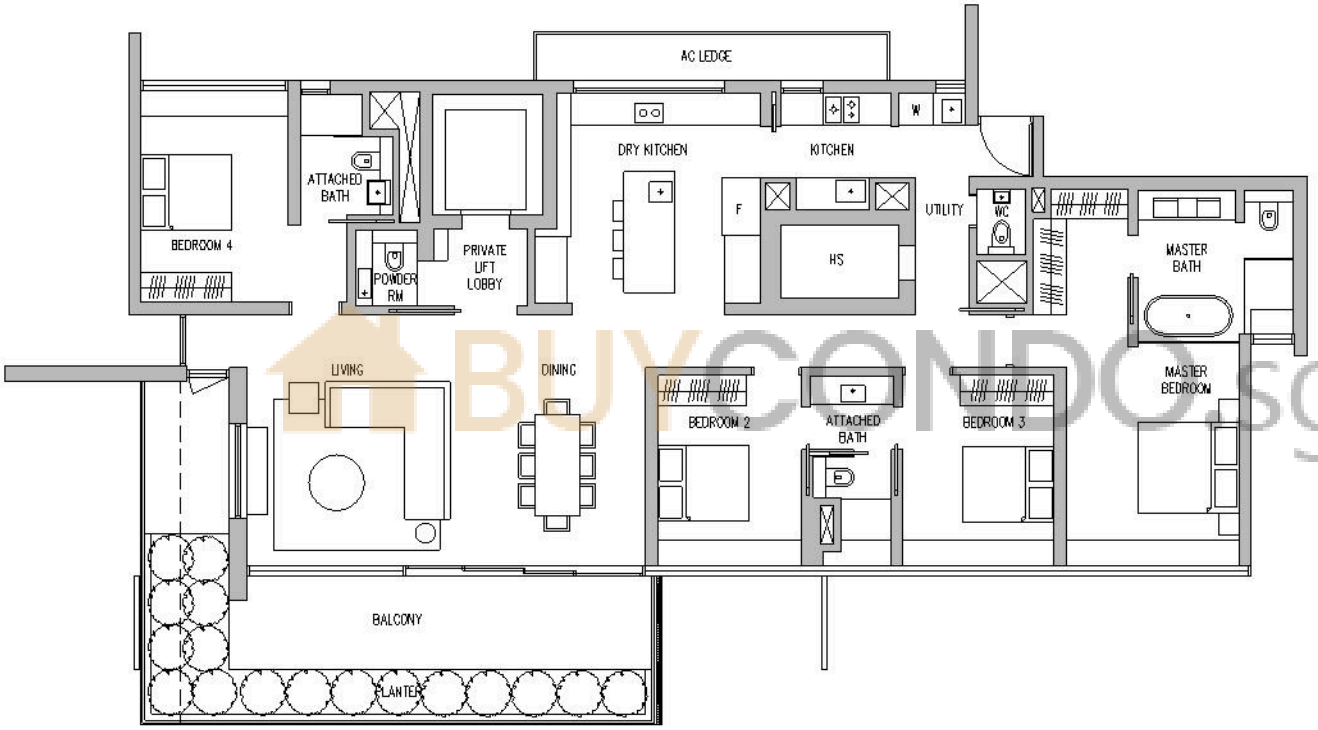

BUYCONDO.sg

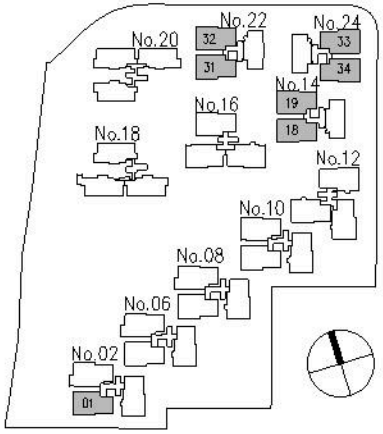

0 1m 2m 5m 10m

BUILDING PLAN REF . A1387-00356-2007-BP01, A1387-00356-2007-BP02, A1387-00356-2007-BP03, A1387-00356-2007-BP04
APPROVAL DATE . 19/04/2011, 25/01/2012, 12/06/2012, 17/12/2013

All areas stated herein include pes, water feature (private pool), private lobby, bay windows, a/c ledges, planters, balconies, roof terraces, outdoor shower and voids where applicable
All areas and measurements stated herein are approximate and subject to adjustment on final survey. Layout / location of wardrobes, kitchen cabinets, fan coil units, electrical points, door swing positions and plaster ceiling boards are subject to Architect' s sole discretion and final design.

LEEDON RESIDENCE

GARDEN SUITE
4 BEDROOM
TYPE 4A-P5

401 sqm / 4,316 sqft

unit 01-18

Mirror Unit
unit 01-19

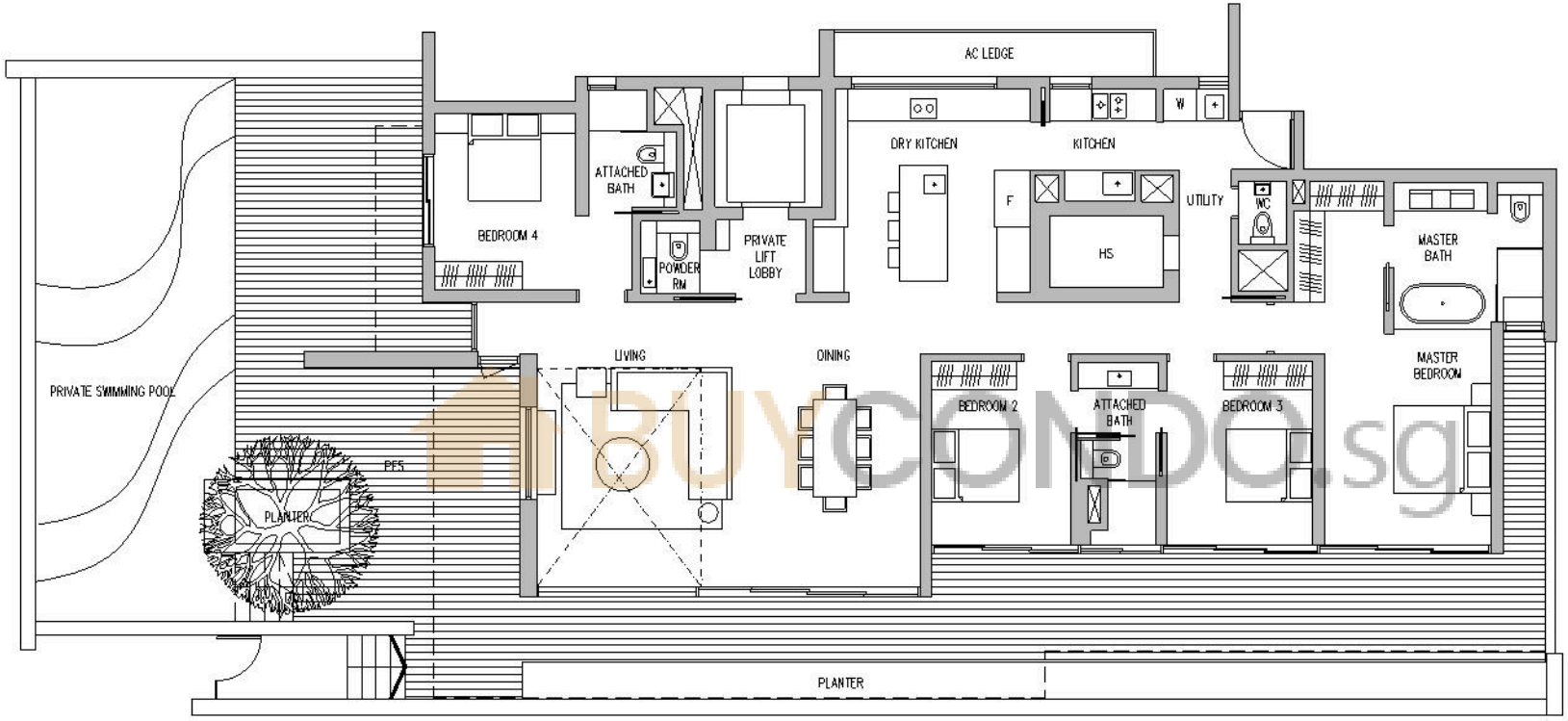

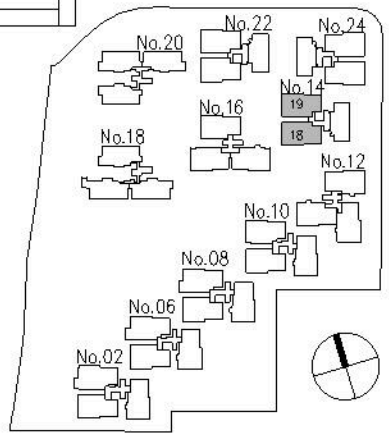

0 1m 2m 5m 10m

BUILDING PLAN REF : A1387-00356-2007-BP01, A1387-00356-2007-BP02, A1387-00356-2007-BP03, A1387-00356-2007-BP04
APRROVAL DATE : 19/04/2011, 25/01/2012, 12/06/2012, 17/12/2013

All areas stated herein include pes, water feature (private pool), private lobby, bay windows, a/c ledges, planters, balconies, roof terraces, outdoor shower and voids where applicable.
All areas and measurements stated herein are approximate and subject to adjustment on final survey. Layout / location of wardrobes, kitchen cabinets, fan coil units, electrical points, door swing positions and plaster ceiling boards are subject to Architect' s sole discretion and final design.

BUYCONDO.sg

LEEDON RESIDENCE

GARDEN SUITE
4 BEDROOM
TYPE 4A-P6

380 sqm / 4,090 sqft

unit 01-31

Mirror Unit
unit 01-32

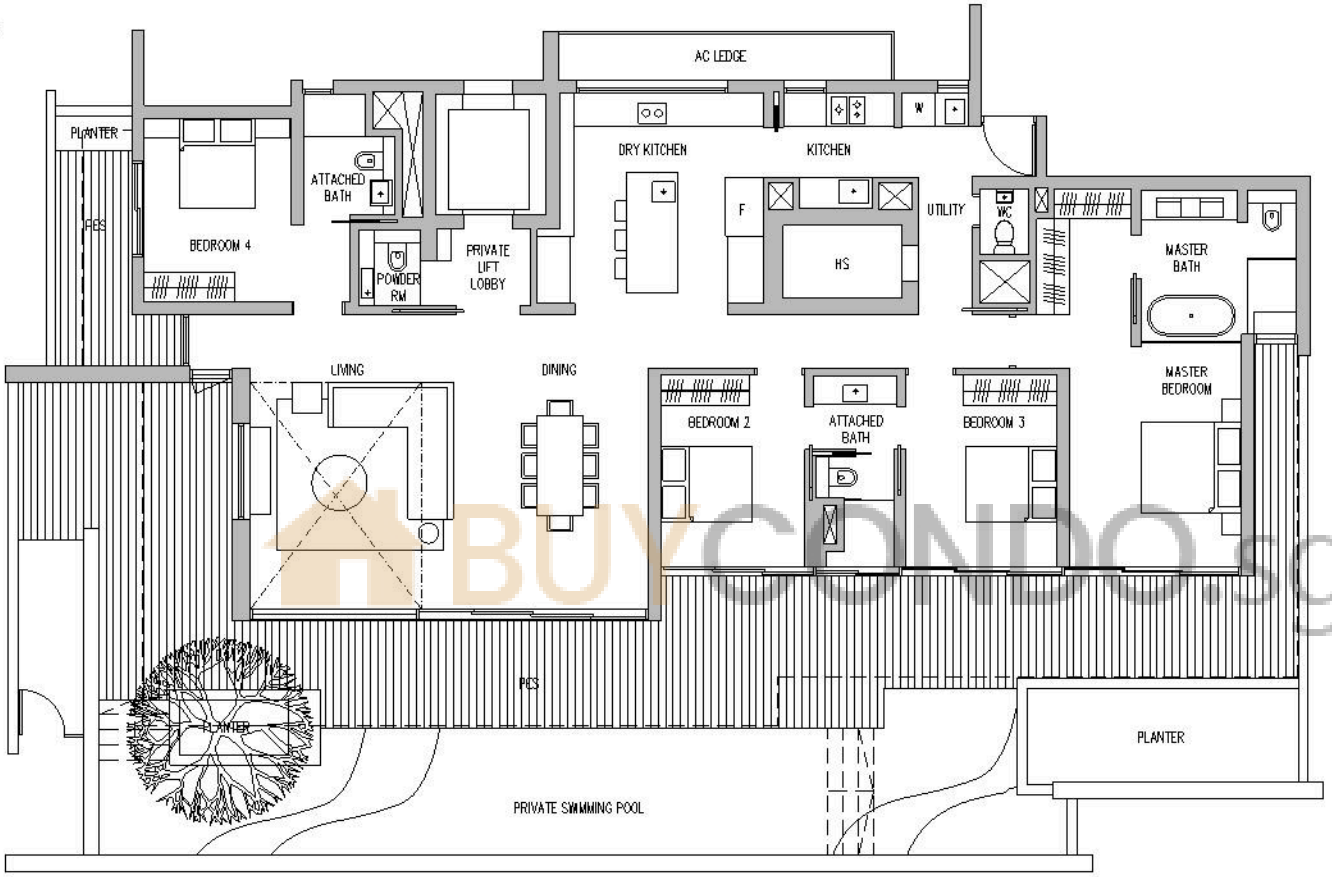

BUYCONDO.sg

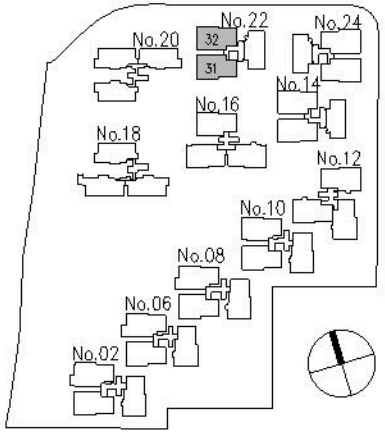

0 1m 2m 5m 10m

BUILDING PLAN REF : A1387-00356-2007-BP01, A1387-00356-2007-BP02, A1387-00356-2007-BP03, A1387-00356-2007-BP04
APRROVAL DATE : 19/04/2011, 25/01/2012, 12/06/2012, 17/12/2013

All areas stated herein include pes, water feature (private pool), private lobby, bay windows, a/c ledges, planters, balconies, roof terraces, outdoor shower and voids where applicable.
All areas and measurements stated herein are approximate and subject to adjustment on final survey. Layout / location of wardrobes, kitchen cabinets, fan coil units, electrical points, door swing positions and plaster ceiling boards are subject to Architect' s sole discretion and final design.

LEEDON RESIDENCE

GARDEN SUITE
4 BEDROOM
TYPE 4A-P7

378 sqm / 4,069 sqft

unit 01-33

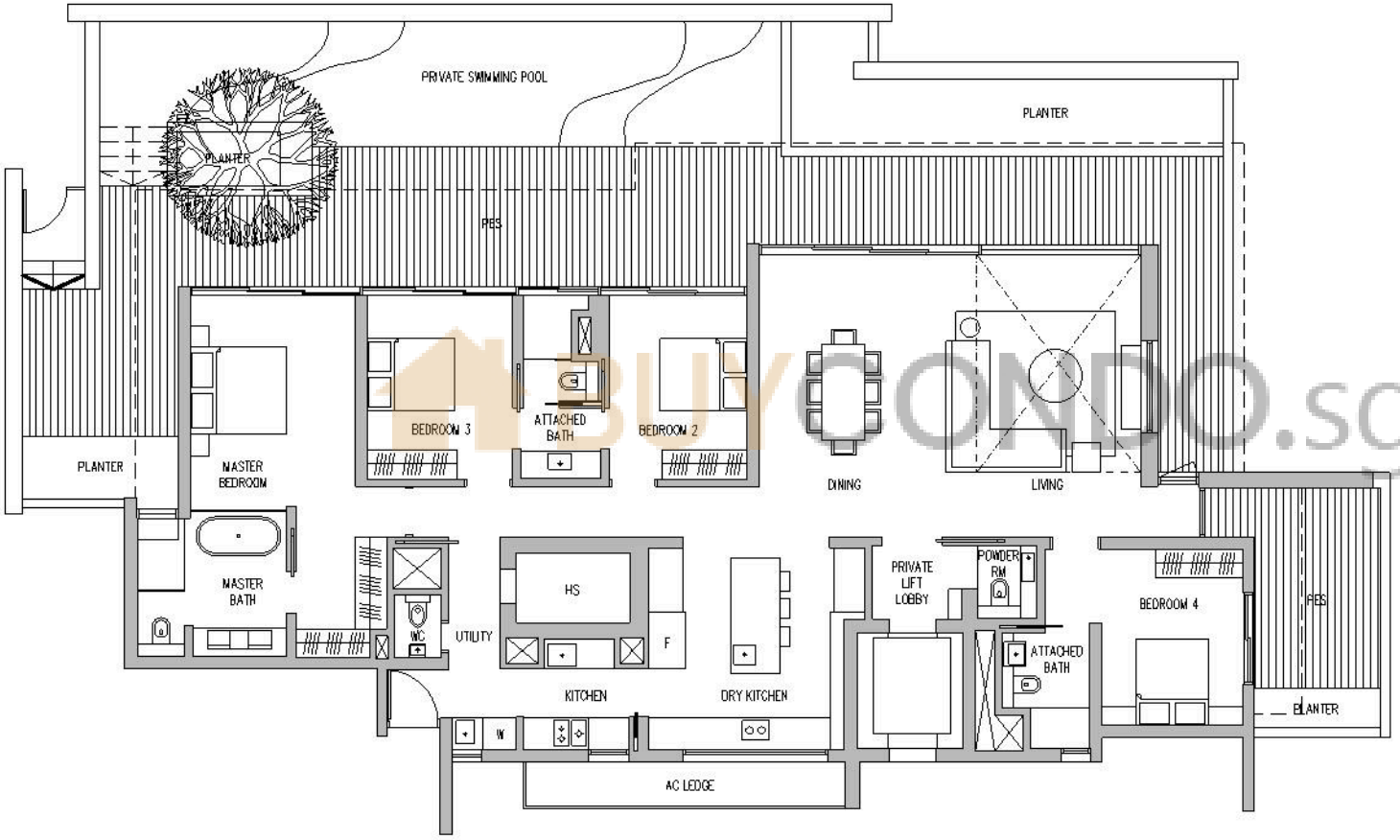

BUYCONDO.sg

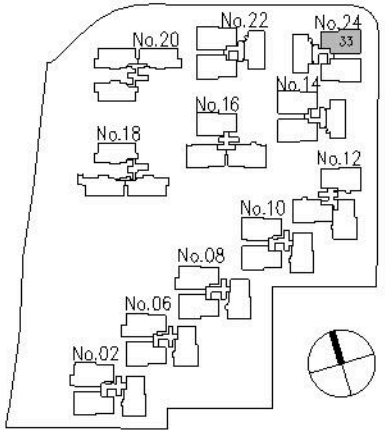

0 1m 2m 5m 10m

BUILDING PLAN REF : A1387-00356-2007-BP01, A1387-00356-2007-BP02, A1387-00356-2007-BP03, A1387-00356-2007-BP04
APRROVAL DATE : 19/04/2011, 25/01/2012, 12/06/2012, 17/12/2013

All areas stated herein include pes, water feature (private pool), private lobby, bay windows, a/c ledges, planters, balconies, roof terraces, outdoor shower and voids where applicable.
All areas and measurements stated herein are approximate and subject to adjustment on final survey. Layout / location of wardrobes, kitchen cabinets, fan coil units, electrical points, door swing positions and plaster ceiling boards are subject to Architect' s sole discretion and final design.

LEEDON RESIDENCE

GARDEN SUITE
4 BEDROOM
TYPE 4A-P8

448 sqm / 4,822 sqft

unit 01-34

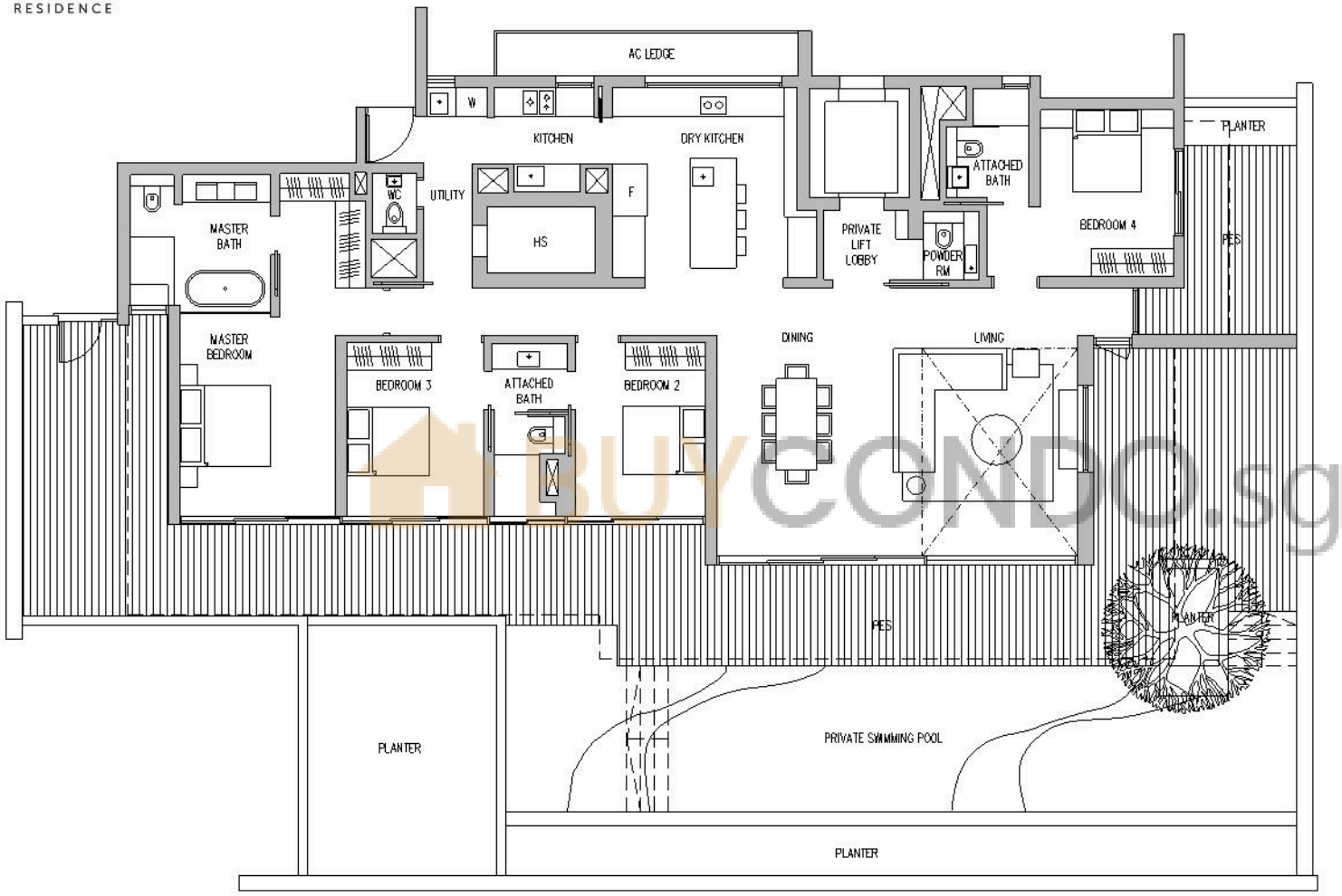

BUYCONDO.sg

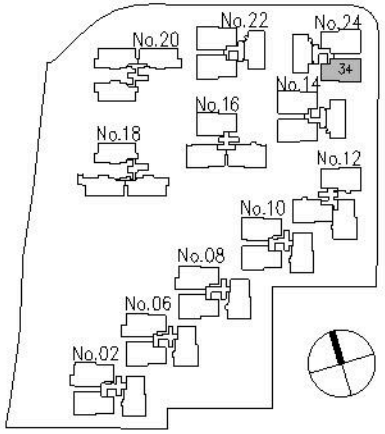

0 1m 2m 5m 10m

BUILDING PLAN REF : A1387-00356-2007-BP01, A1387-00356-2007-BP02, A1387-00356-2007-BP03, A1387-00356-2007-BP04
APRROVAL DATE : 19/04/2011, 25/01/2012, 12/06/2012, 17/12/2013

All areas stated herein include pes, water feature (private pool), private lobby, bay windows, a/c ledges, planters, balconies, roof terraces, outdoor shower and voids where applicable.
All areas and measurements stated herein are approximate and subject to adjustment on final survey. Layout / location of wardrobes, kitchen cabinets, fan coil units, electrical points, door swing positions and plaster ceiling boards are subject to Architect' s sole discretion and final design.

LEEDON RESIDENCE

4 BEDROOM
TYPE 4A

248 sqm / 2,669 sqft

unit 03-02 / 05 / 08 / 11 / 19 / 32 / 34
unit 05-02 / 05 / 08 / 11 / 19 / 32 / 34
unit 07-02 / 05 / 08 / 11 / 19 / 32 / 34
unit 09-02 / 05 / 08 / 11 / 19 / 32 / 34

Mirror Unit
unit 03-01/ 18 / 31 / 33
unit 05-01/ 18 / 31 / 33
unit 07-01/ 18 / 31 / 33
unit 09-01/ 18 / 31 / 33

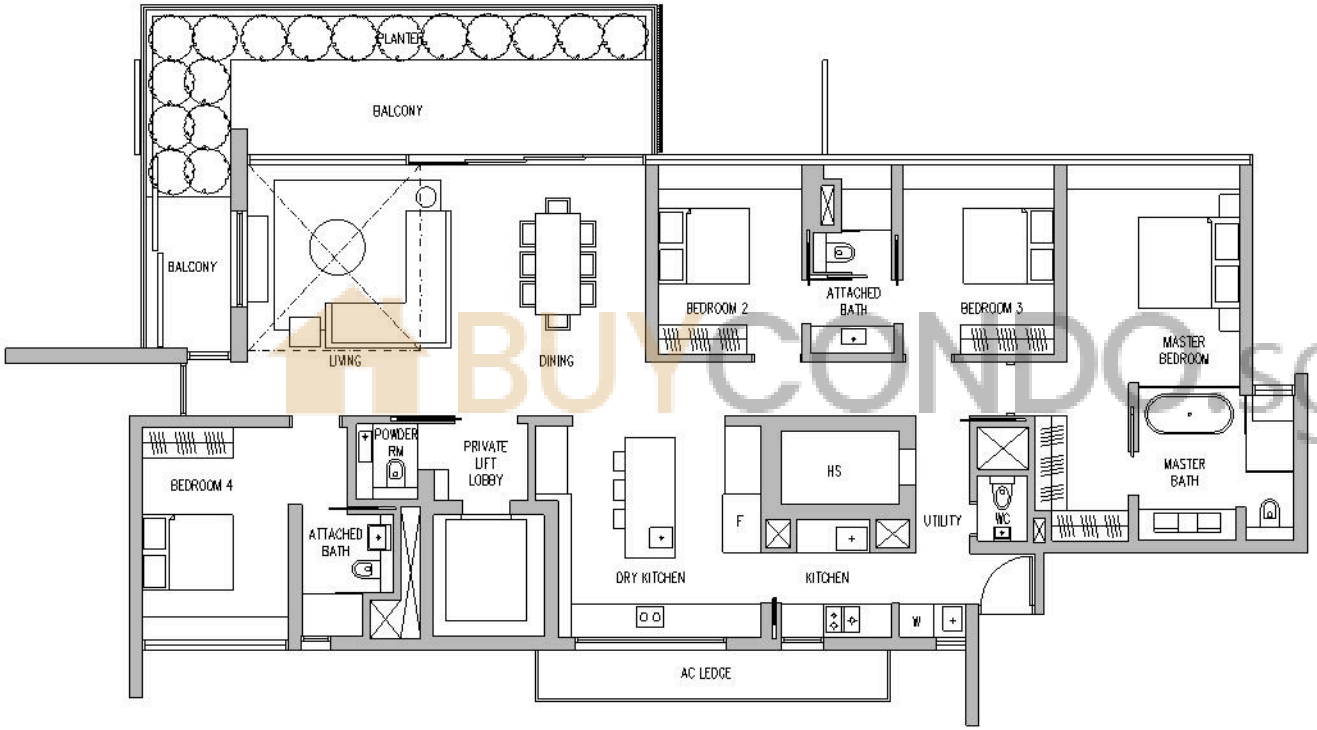

BUYCONDO.sg

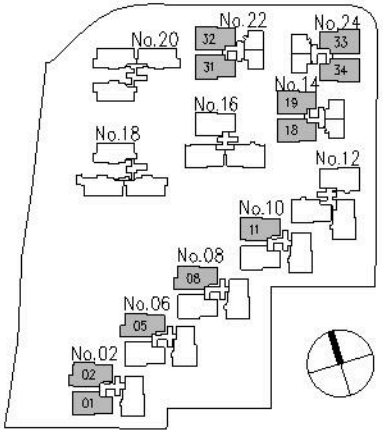

0 1m 2m 5m 10m

BUILDING PLAN REF : A1387-00356-2007-BP01, A1387-00356-2007-BP02, A1387-00356-2007-BP03, A1387-00356-2007-BP04
APRROVAL DATE : 19/04/2011, 25/01/2012, 12/06/2012, 17/12/2013

All areas stated herein include pes, water feature (private pool), private lobby, bay windows, a/c ledges, planters, balconies, roof terraces, outdoor showers and voids where applicable.
All areas and measurements stated herein are approximate and subject to adjustment on final survey. Layout / location of wardrobes, kitchen cabinets, fan coil units, electrical points, door swing positions and plaster ceiling boards are subject to Architect' s sole discretion and final design.

LEEDON RESIDENCE

SKY SUITE
4 BEDROOM
TYPE 4A-R

348 sqm / 3,746 sqft

unit 12-01 / 18 / 31 / 33

Mirror Unit
unit 12- 19 / 32 / 34

Lower Level

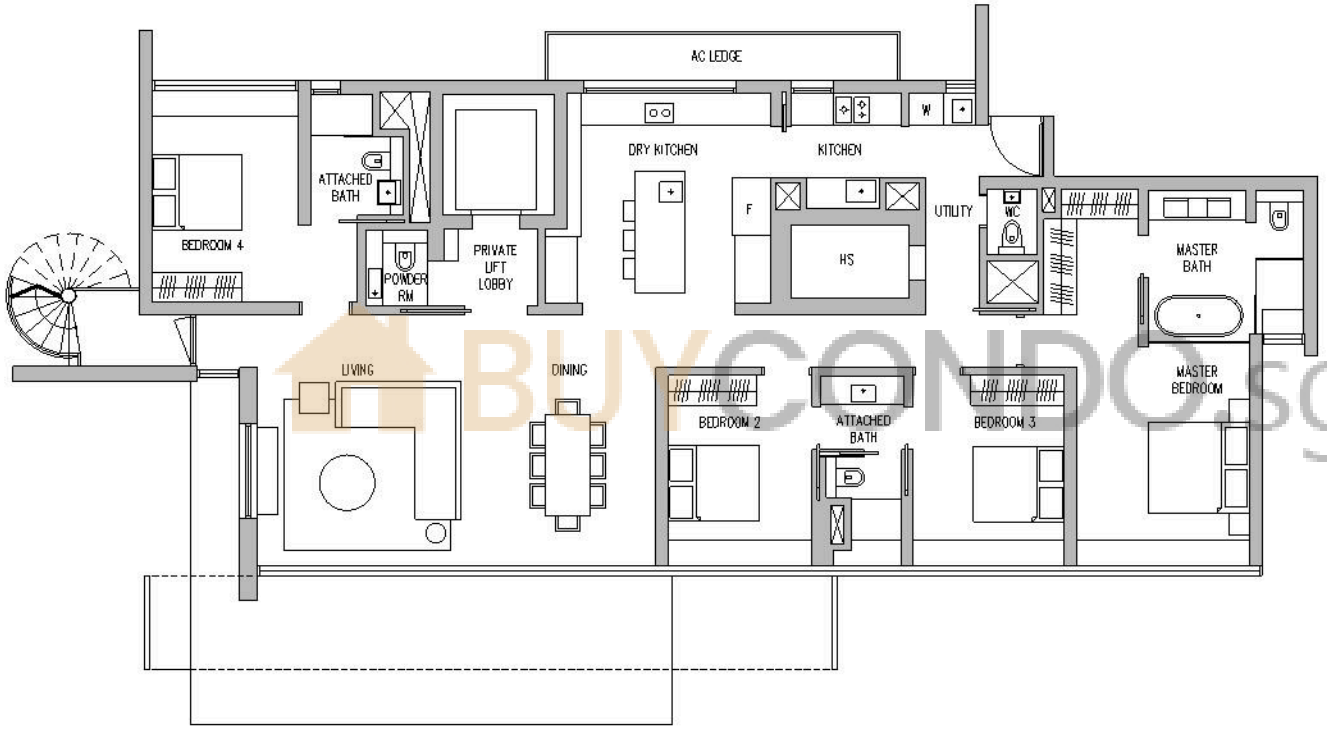

BUYCONDO.sg

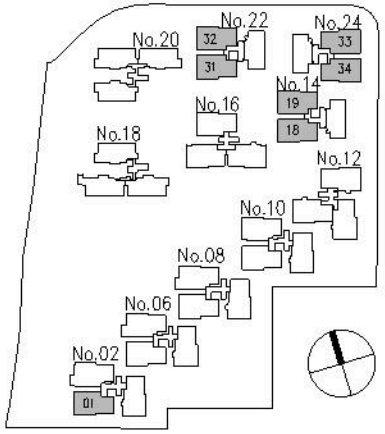

0 1m 2m 5m 10m

BUILDING PLAN REF : A1387-00356-2007-BP01, A1387-00356-2007-BP02, A1387-00356-2007-BP03, A1387-00356-2007-BP04
APRROVAL DATE : 19/04/2011, 25/01/2012, 12/06/2012, 17/12/2013

All areas stated herein include pes. water feature (private pool), private lobby, bay windows, a/c ledges, planters, balconies, roof terraces, outdoor shower and voids where applicable.
All areas and measurements stated herein are approximate and subject to adjustment on final survey. Layout / location of wardrobes, kitchen cabinets, fan coil units, electrical points, door swing positions and plaster ceiling boards are subject to Architect' s sole discretion and final design.

LEEDON RESIDENCE

SKY SUITE
4 BEDROOM
TYPE 4A-R

348 sqm / 3,746 sqft

unit 12-01 / 18 / 31 / 33

Mirror Unit
unit 12- 19 / 32 / 34

Roof Garden

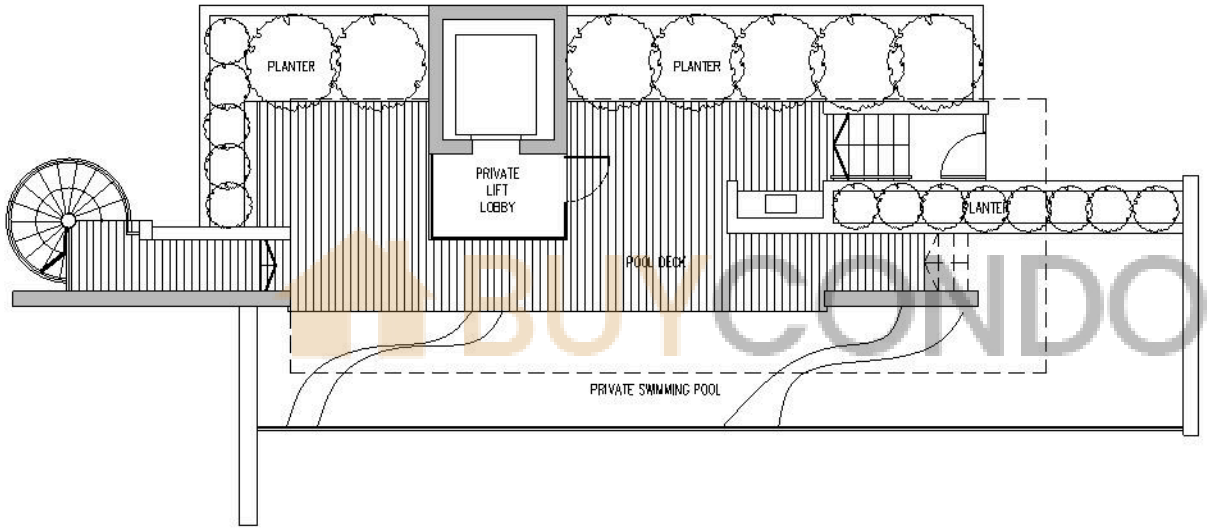

BUYCONDO.sg

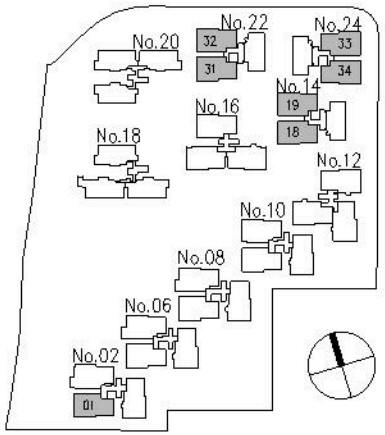

0 1m 2m 5m 10m

BUILDING PLAN REF : A1387-00356-2007-BP01, A1387-00356-2007-BP02, A1387-00356-2007-BP03, A1387-00356-2007-BP04
APRROVAL DATE : 19/04/2011, 25/01/2012, 12/06/2012, 17/12/2013

All areas stated herein include pes, water feature (private pool), private lobby, bay windows, a/c ledges, planters, balconies, roof terraces, outdoor shower and voids where applicable.
All areas and measurements stated herein are approximate and subject to adjustment on final survey. Layout / location of wardrobes, kitchen cabinets, fan coil units, electrical points, door swing positions and plaster ceiling boards are subject to Architect' s sole discretion and final design.

LEEDON RESIDENCE

4 BEDROOM
TYPE 4B-H

231 sqm / 2,486 sqft

unit 11-03/ 06 / 09 / 12 / 15

Mirror Unit
unit 11-20

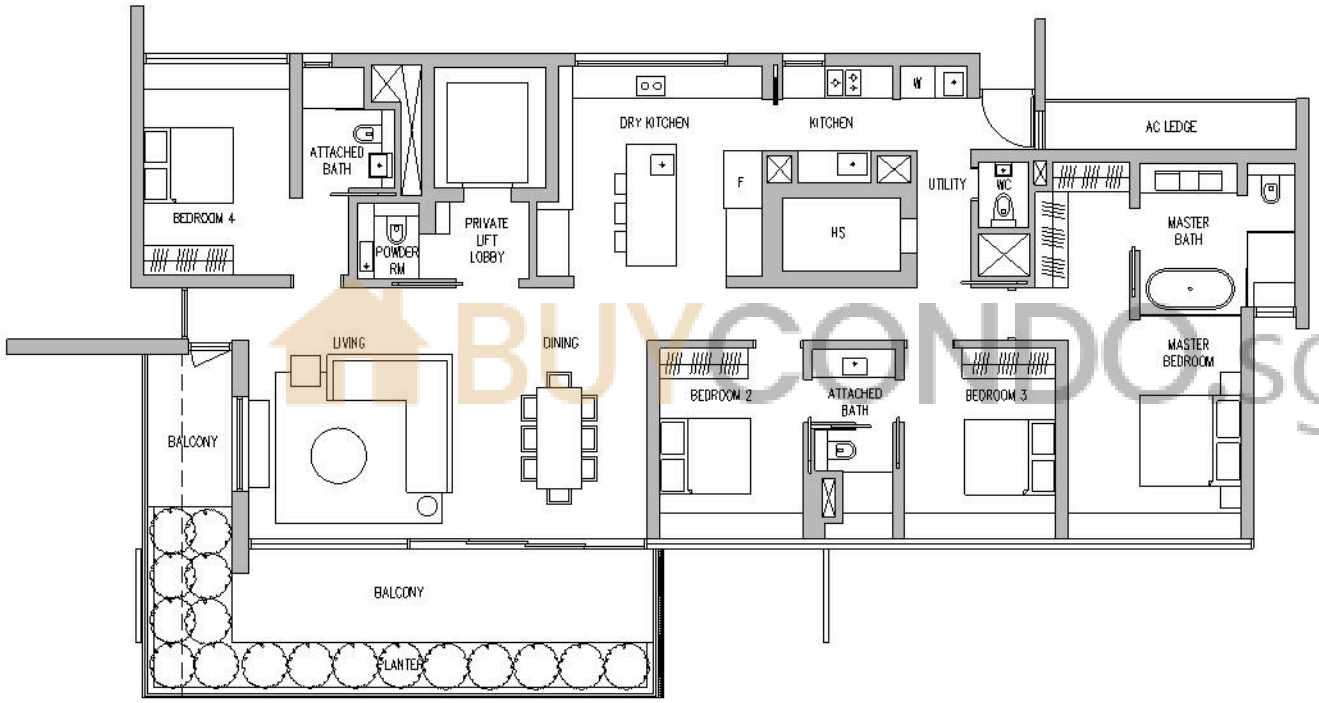

BUYCONDO.sg

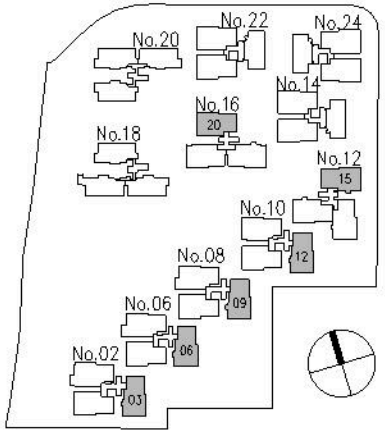

0 1m 2m 5m 10m

BUILDING PLAN REF : A1387-00356-2007-BP01, A1387-00356-2007-BP02, A1387-00356-2007-BP03, A1387-00356-2007-BP04
APRROVAL DATE : 19/04/2011, 25/01/2012, 12/06/2012, 17/12/2013

All areas stated herein include pes, water feature (private pool), private lobby, bay windows, a/c ledges, planters, balconies, roof terraces, outdoor shower and voids where applicable.
All areas and measurements stated herein are approximate and subject to adjustment on final survey. Layout / location of wardrobes, kitchen cabinets, fan coil units, electrical points, door swing positions and plaster ceiling boards are subject to Architect' s sole discretion and final design.

LEEDON RESIDENCE

GARDEN SUITE
4 BEDROOM
TYPE 4B-P3

396 sqm / 4,263 sqft

unit 01-12

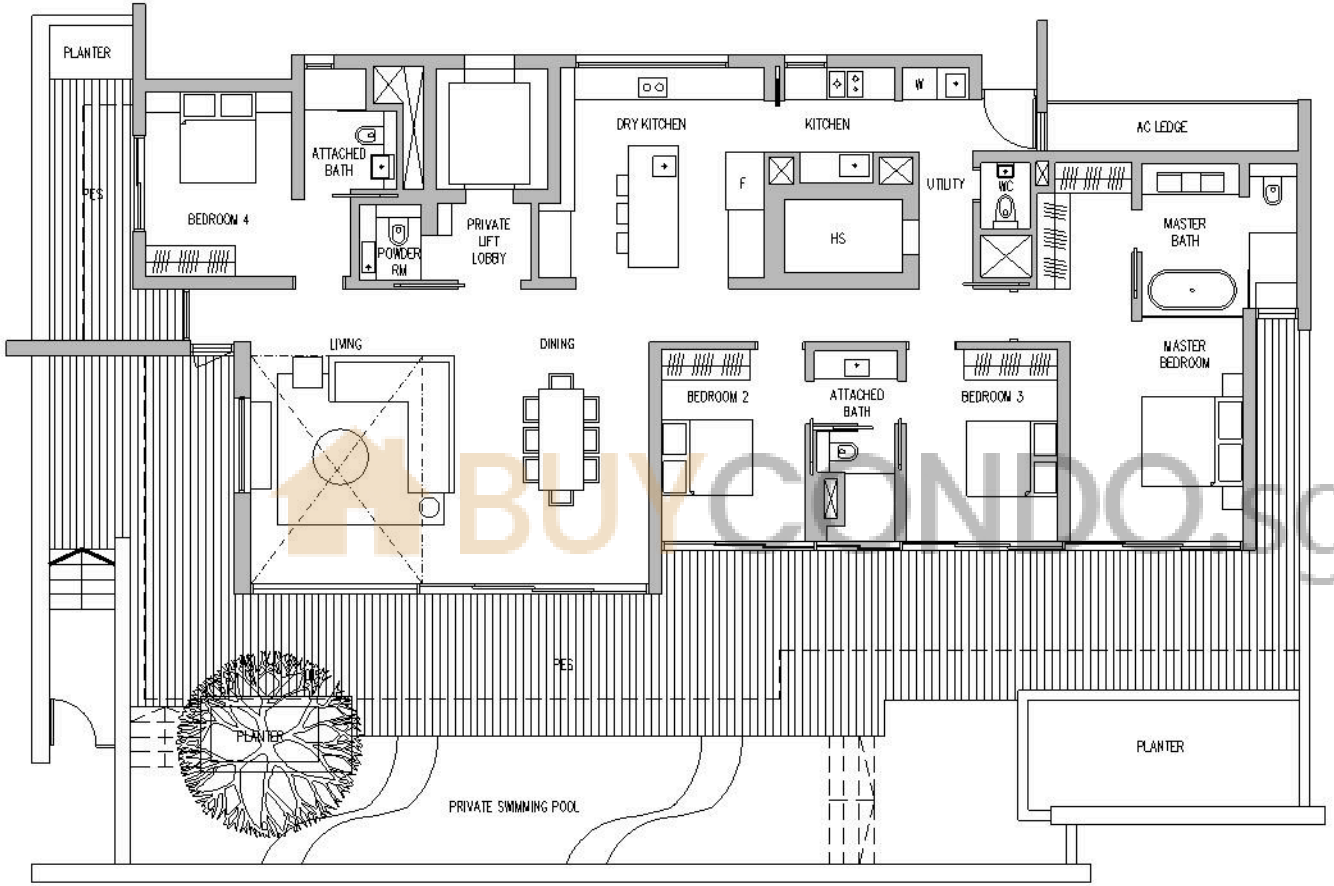

BUYCONDO.sg

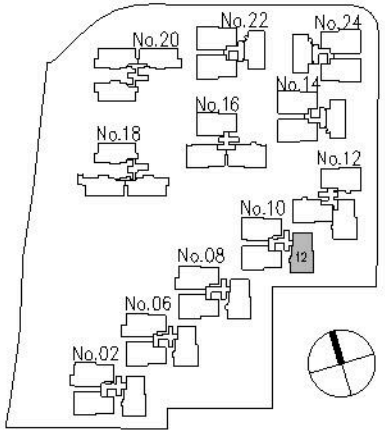

0 1m 2m 5m 10m

BUILDING PLAN REF : A1387-00356-2007-BP01, A1387-00356-2007-BP02, A1387-00356-2007-BP03, A1387-00356-2007-BP04
APRROVAL DATE : 19/04/2011, 25/01/2012, 12/06/2012, 17/12/2013

All areas stated herein include pes, water feature (private pool), private lobby, bay windows, a/c ledges, planters, balconies, roof terraces, outdoor shower and voids where applicable.
All areas and measurements stated herein are approximate and subject to adjustment on final survey. Layout / location of wardrobes, kitchen cabinets, fan coil units, electrical points, door swing positions and plaster ceiling boards are subject to Architect' s sole discretion and final design.

LEEDON RESIDENCE

GARDEN SUITE
4 BEDROOM
TYPE 4B-P4

316 sqm / 3,401 sqft

unit 01-15

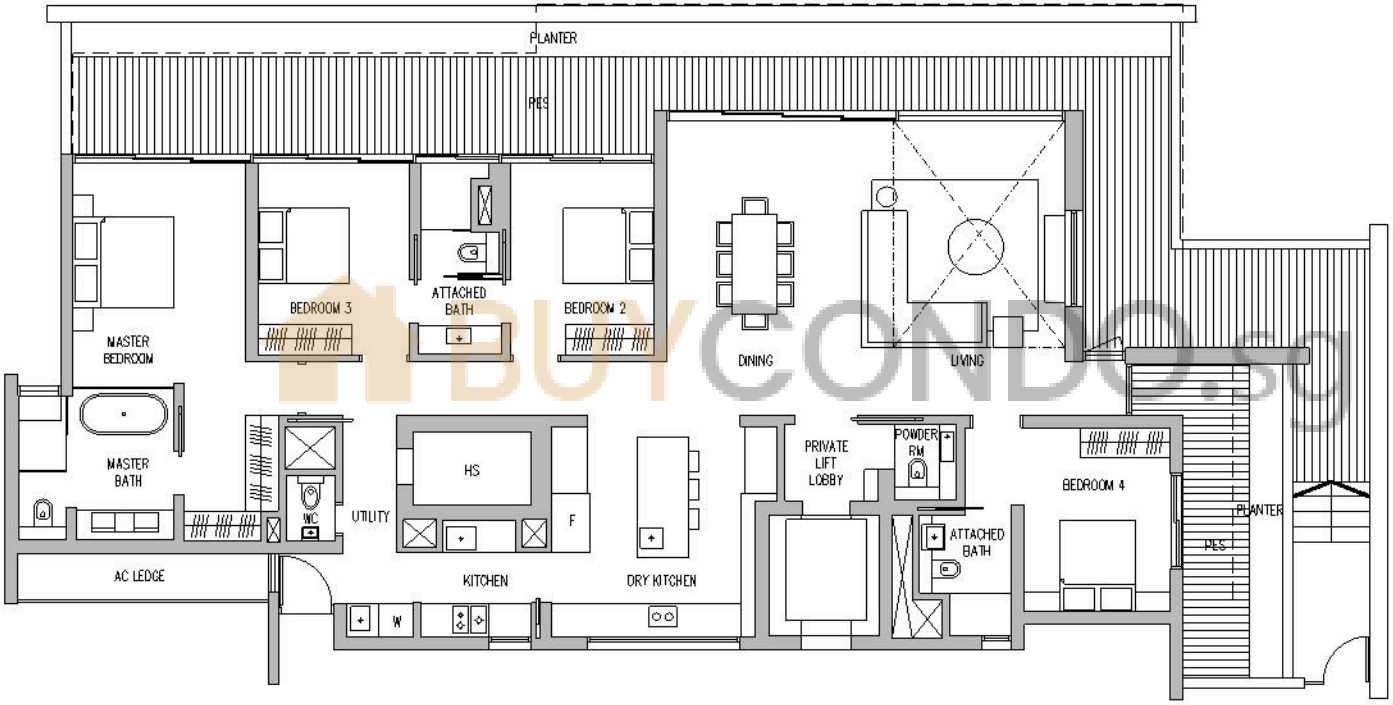

BUYCONDO.sg

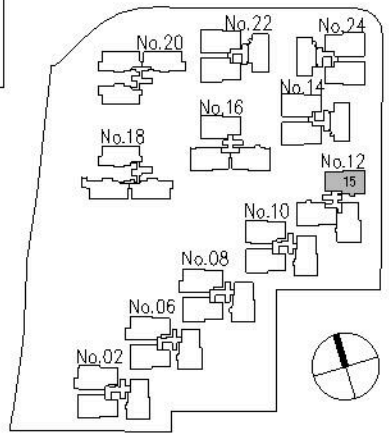

0 1m 2m 5m 10m

BUILDING PLAN REF : A1387-00356-2007-BP01, A1387-00356-2007-BP02, A1387-00356-2007-BP03, A1387-00356-2007-BP04
APRROVAL DATE : 19/04/2011, 25/01/2012, 12/06/2012, 17/12/2013

All areas stated herein include pes, water feature (private pool), private lobby, bay windows, a/c ledges, planters, balconies, roof terraces, outdoor shower and voids where applicable.
All areas and measurements stated herein are approximate and subject to adjustment on final survey. Layout / location of wardrobes, kitchen cabinets, fan coil units, electrical points, door swing positions and plaster ceiling boards are subject to Architect' s sole discretion and final design.

LEEDON RESIDENCE

GARDEN SUITE
4 BEDROOM
TYPE 4B-P5

491 sqm / 5,285 sqft

unit 01-20

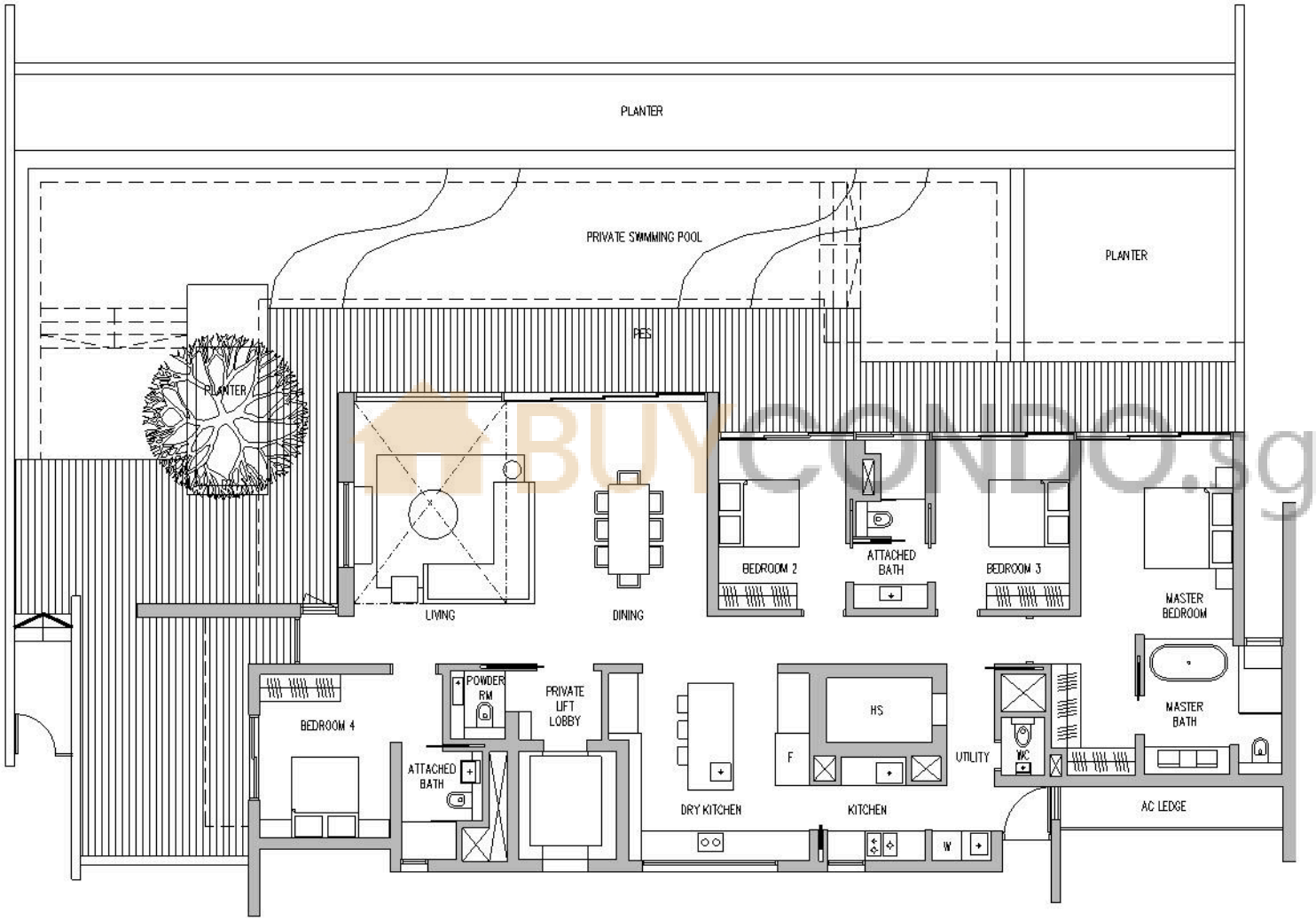

BUYCONDO.sg

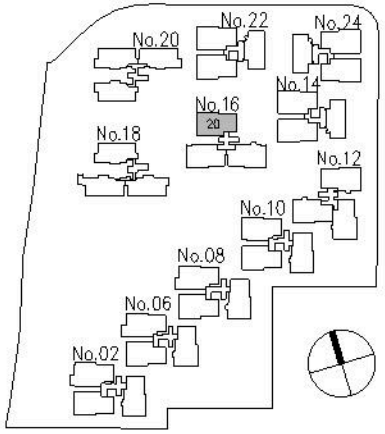

0 1m 2m 5m 10m

BUILDING PLAN REF : A1387-00356-2007-BP01, A1387-00356-2007-BP02, A1387-00356-2007-BP03, A1387-00356-2007-BP04
APRROVAL DATE : 19/04/2011, 25/01/2012, 12/06/2012, 17/12/2013

All areas stated herein include pes, water feature (private pool), private lobby, bay windows, a/c ledges, planters, balconies, roof terraces, outdoor shower and voids where applicable.
All areas and measurements stated herein are approximate and subject to adjustment on final survey. Layout / location of wardrobes, kitchen cabinets, fan coil units, electrical points, door swing positions and plaster ceiling boards are subject to Architect' s sole discretion and final design.

LEEDON RESIDENCE

4 BEDROOM
TYPE 4B

246 sqm / 2,648 sqft

unit 03-03/ 06 / 09 / 12 / 15
unit 05-03/ 06 / 09 / 12 / 15
unit 07-03/ 06 / 09 / 12 / 15
unit 09-03/ 06 / 09 / 12 / 15

Mirror Unit
unit 03-20
unit 05-20
unit 07-20
unit 09-20

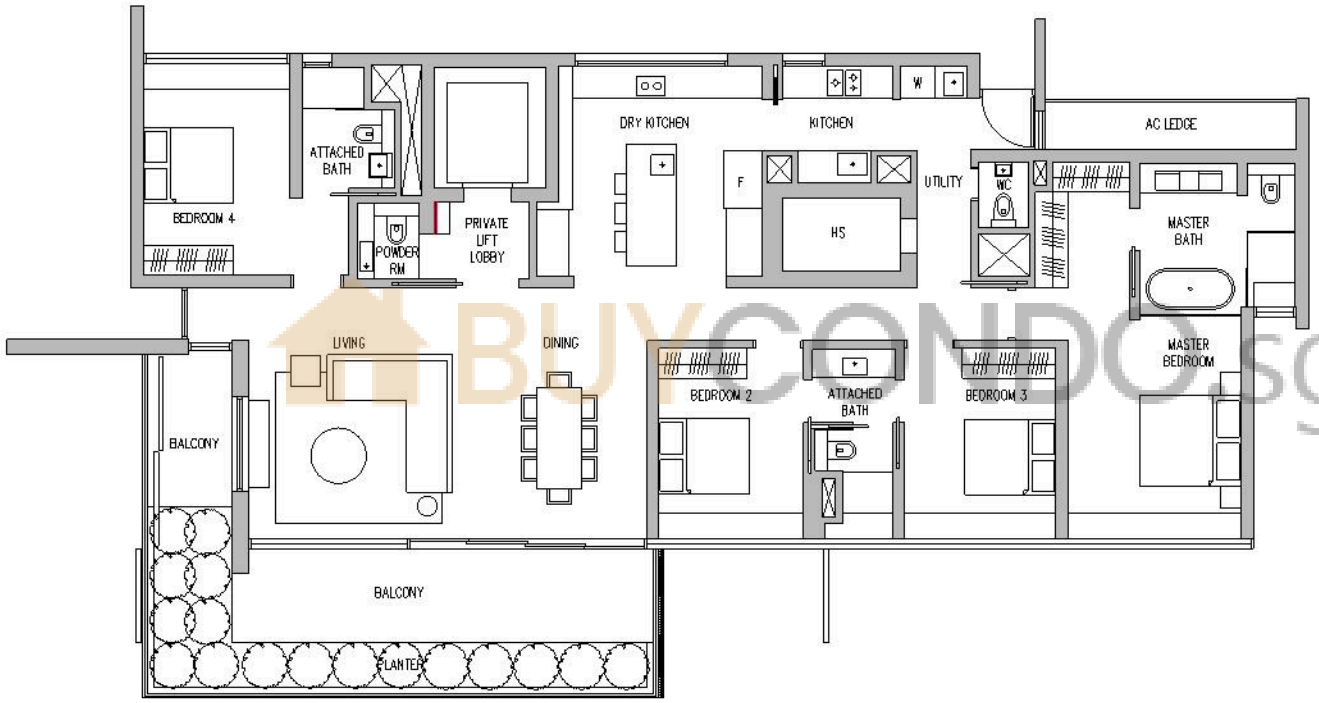

BUYCONDO.sg

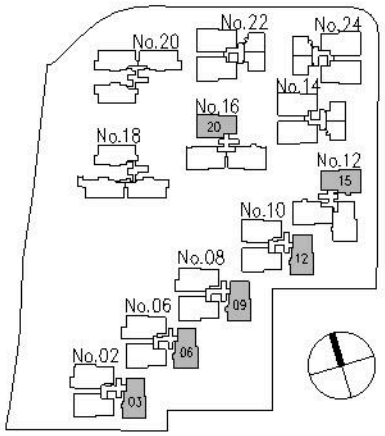

0 1m 2m 5m 10m

BUILDING PLAN REF : A1387-00356-2007-BP01, A1387-00356-2007-BP02, A1387-00356-2007-BP03, A1387-00356-2007-BP04
APRROVAL DATE : 19/04/2011, 25/01/2012, 12/06/2012, 17/12/2013

All areas stated herein include pes, water feature (private pool), private lobby, bay windows, a/c ledges, planters, balconies, roof terraces, outdoor shower and voids where applicable.
All areas and measurements stated herein are approximate and subject to adjustment on final survey. Layout / location of wardrobes, kitchen cabinets, fan coil units, electrical points, door swing positions and plaster ceiling boards are subject to Architect' s sole discretion and final design.

LEEDON RESIDENCE

SKY SUITE
4 BEDROOM
TYPE 4B-R1

347 sqm / 3,735 sqft

unit 12-20

Lower Level

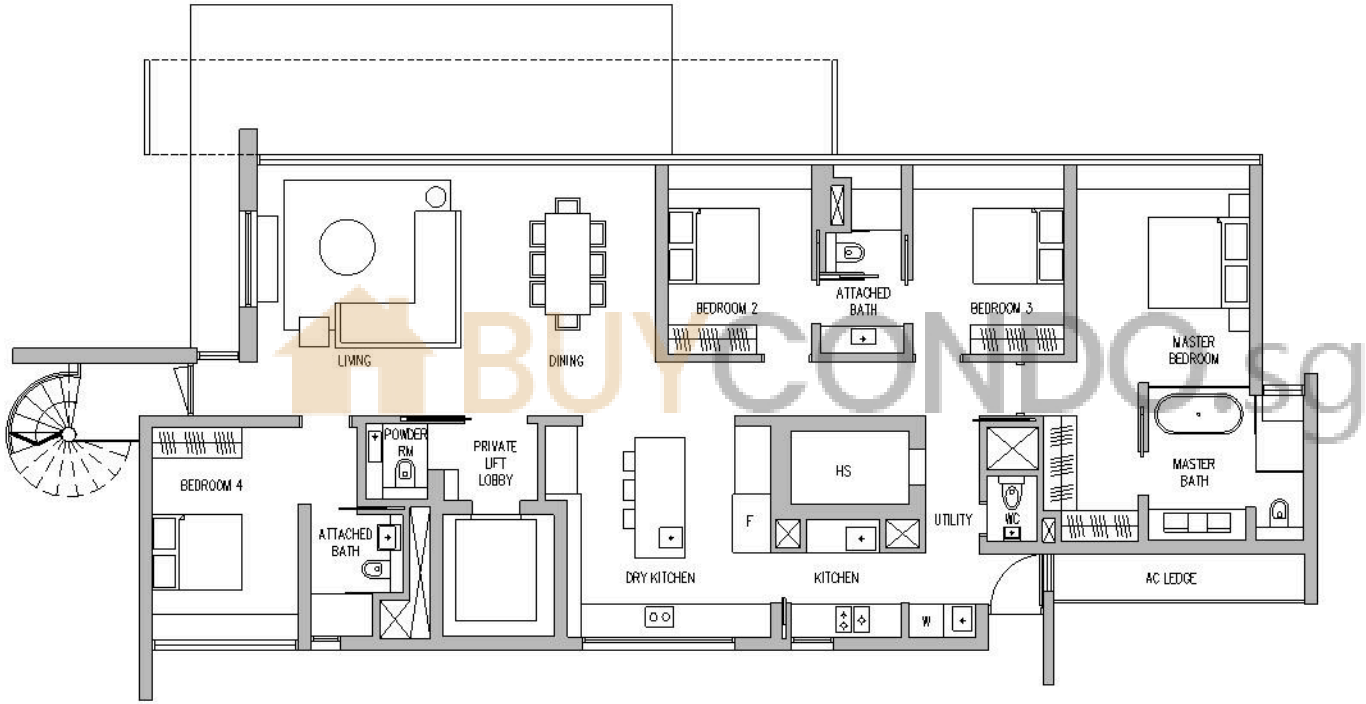

BUYCONDO.sg

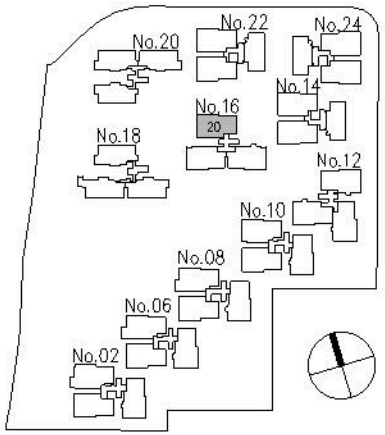

0 1m 2m 5m 10m

BUILDING PLAN REF : A1387-00356-2007-BP01, A1387-00356-2007-BP02, A1387-00356-2007-BP03, A1387-00356-2007-BP04
APRROVAL DATE : 19/04/2011, 25/01/2012, 12/06/2012, 17/12/2013

All areas stated herein include pes, water feature (private pool), private lobby, bay windows, a/c ledges, planters, balconies, roof terraces, outdoor shower and voids where applicable.
All areas and measurements stated herein are approximate and subject to adjustment on final survey. Layout / location of wardrobes, kitchen cabinets, fan coil units, electrical points, door swing positions and plaster ceiling boards are subject to Architect' s sole discretion and final design.

LEEDON RESIDENCE

SKY SUITE
4 BEDROOM
TYPE 4B-R1

347 sqm / 3,735 sqft

unit 12-20

Roof Garden

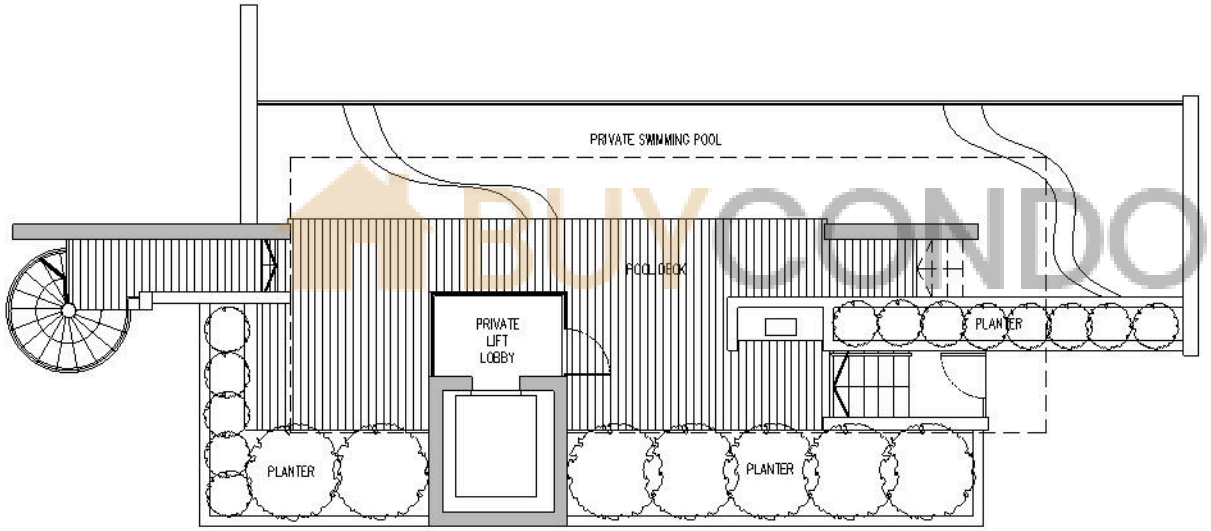

BUYCONDO.sg

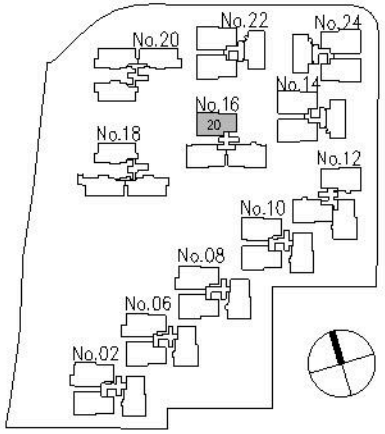

0 1m 2m 5m 10m

BUILDING PLAN REF : A1387-00356-2007-BP01, A1387-00356-2007-BP02, A1387-00356-2007-BP03, A1387-00356-2007-BP04
APRROVAL DATE : 19/04/2011, 25/01/2012, 12/06/2012, 17/12/2013

All areas stated herein include pes, water feature (private pool), private lobby, bay windows, a/c ledges, planters, balconies, roof terraces, outdoor shower and voids where applicable.
All areas and measurements stated herein are approximate and subject to adjustment on final survey. Layout / location of wardrobes, kitchen cabinets, fan coil units, electrical points, door swing positions and plaster ceiling boards are subject to Architect' s sole discretion and final design.

LEEDON RESIDENCE

SKY SUITE
4 BEDROOM
TYPE 4B-R

339 sqm / 3,649 sqft

unit 12-03/ 06 / 09 / 12 /15

Lower Level

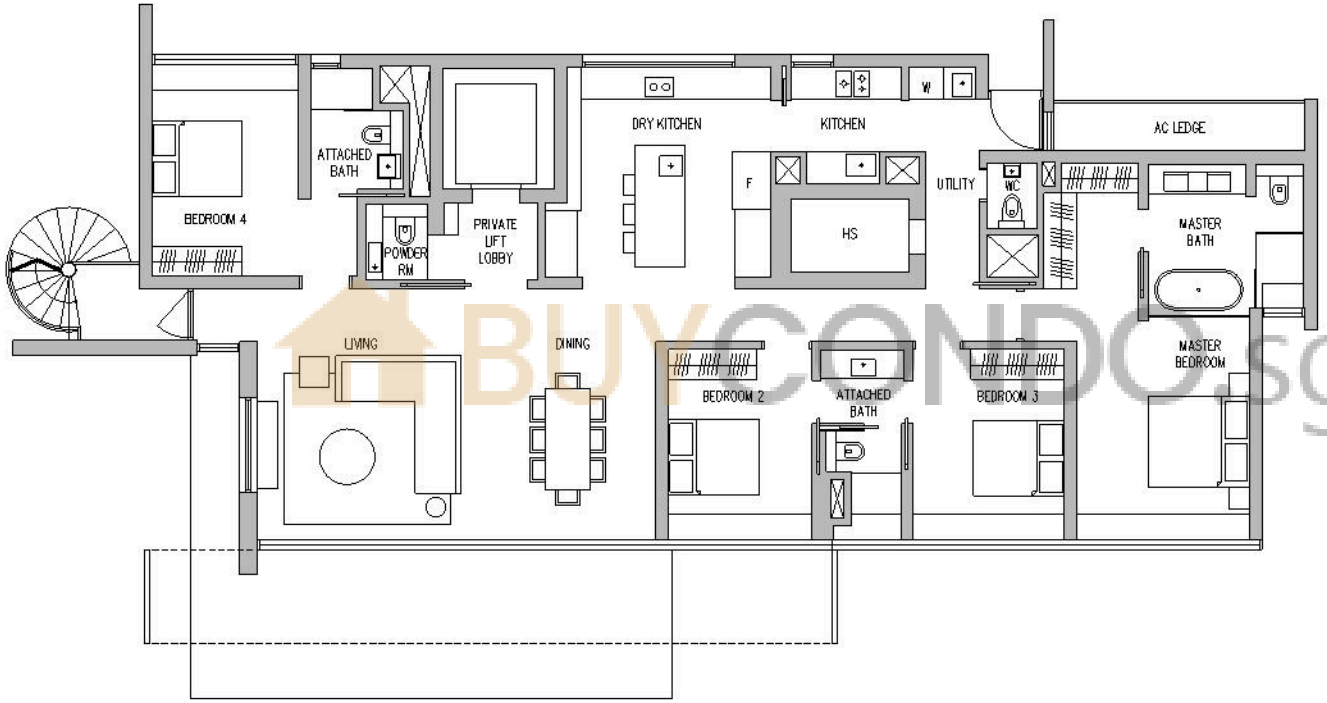

BUYCONDO.sg

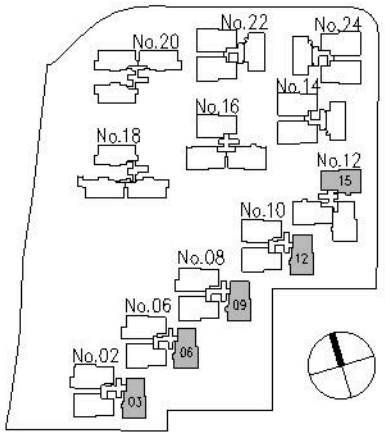

0 1m 2m 5m 10m

BUILDING PLAN REF : A1387-00356-2007-BP01, A1387-00356-2007-BP02, A1387-00356-2007-BP03, A1387-00356-2007-BP04
APRROVAL DATE : 19/04/2011, 25/01/2012, 12/06/2012, 17/12/2013

All areas stated herein include pes, water feature (private pool), private lobby, bay windows, a/c ledges, planters, balconies, roof terraces, outdoor shower and voids where applicable.
All areas and measurements stated herein are approximate and subject to adjustment on final survey. Layout / location of wardrobes, kitchen cabinets, fan coil units, electrical points, door swing positions and plaster ceiling boards are subject to Architect' s sole discretion and final design.

LEEDON RESIDENCE

SKY SUITE
4 BEDROOM
TYPE 4B-R

339 sqm / 3,649 sqft

unit 12-03/ 06 / 09 / 12 /15

Roof Garden

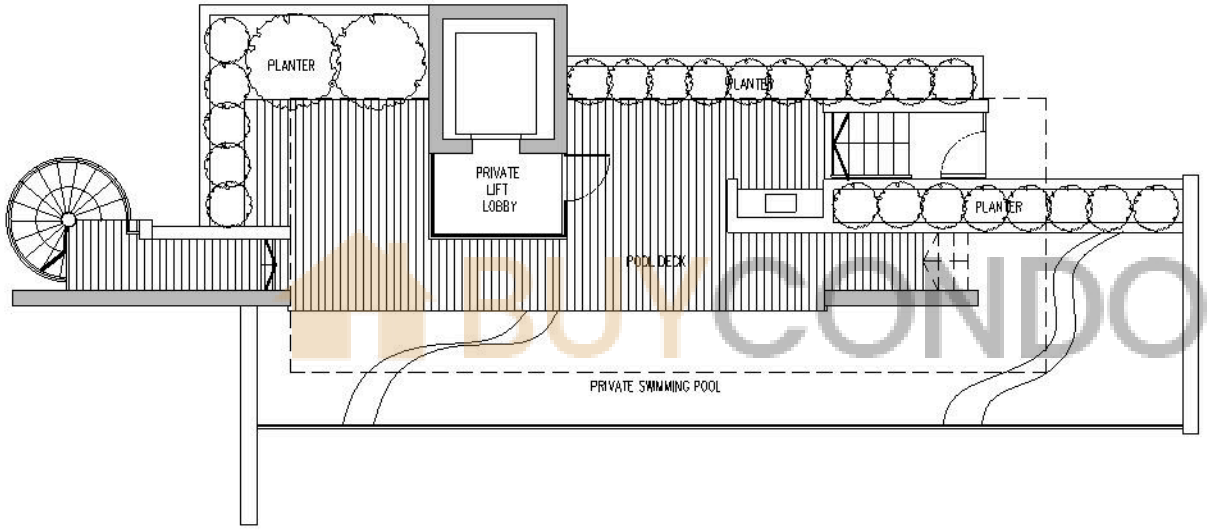

BUYCONDO.sg

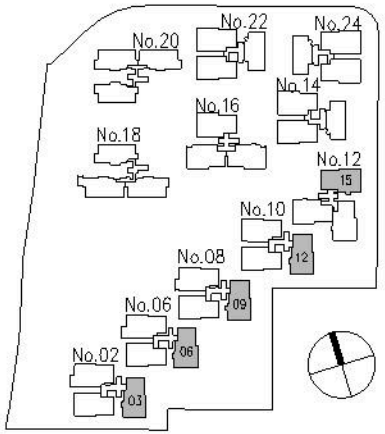

0 1m 2m 5m 10m

BUILDING PLAN REF : A1387-00356-2007-BP01, A1387-00356-2007-BP02, A1387-00356-2007-BP03, A1387-00356-2007-BP04
APRROVAL DATE : 19/04/2011, 25/01/2012, 12/06/2012, 17/12/2013

All areas stated herein include pex, water feature (private pool), private lobby, bay windows, a/c ledges, planters, balconies, roof terraces, outdoor shower and voids where applicable. All areas and measurements stated herein are approximate and subject to adjustment on final survey. Layout / location of wardrobes, kitchen cabinets, fan coil units, electrical points, door swing positions and plaster ceiling boards are subject to Architect' s sole discretion and final design.

LEEDON RESIDENCE

GARDEN SUITE
4 BEDROOM
TYPE 4C-P2

428 sqm / 4,607 sqft

unit 01-22

Mirror Unit
unit 01-21

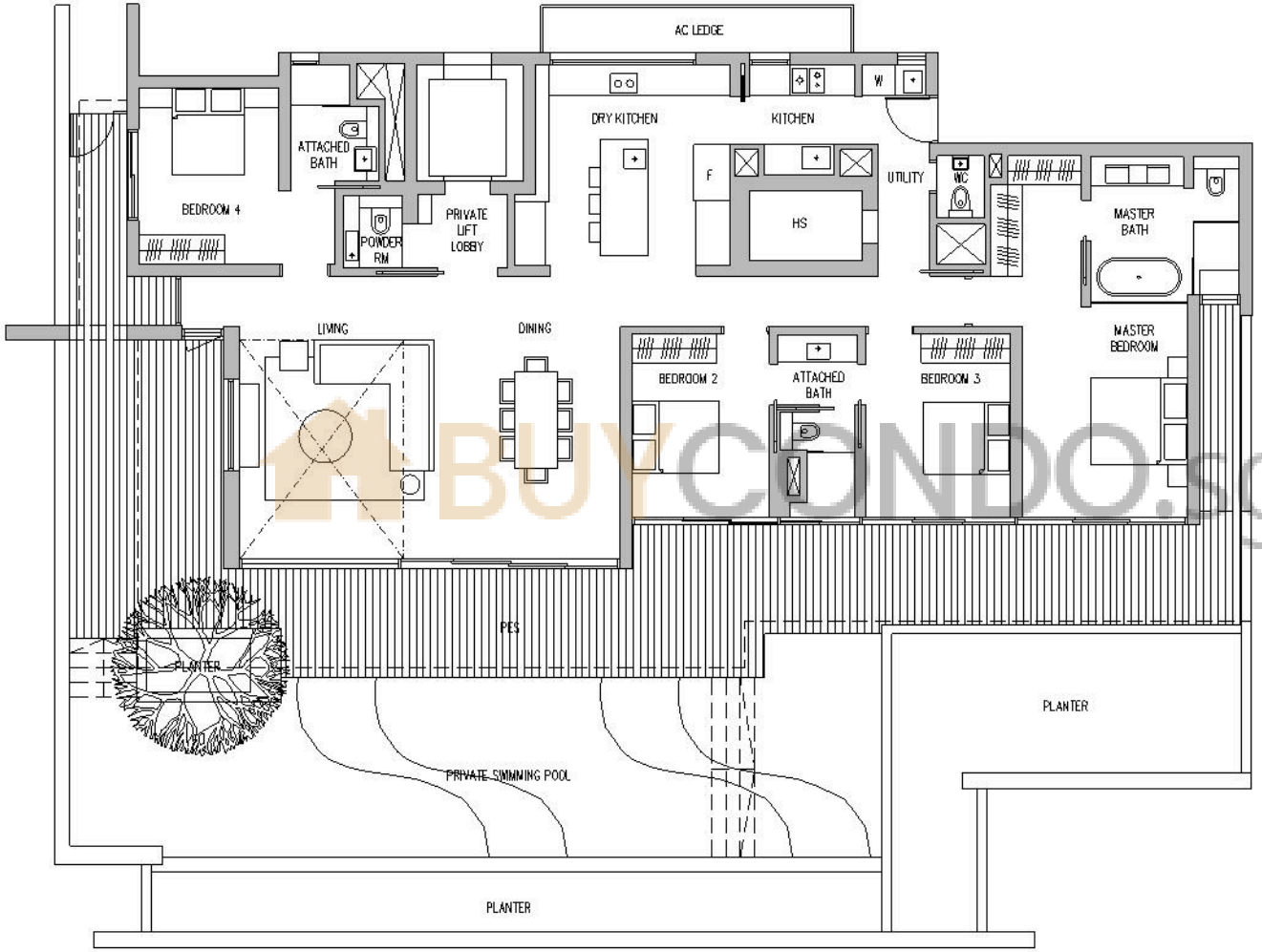

BUYCONDO.sg

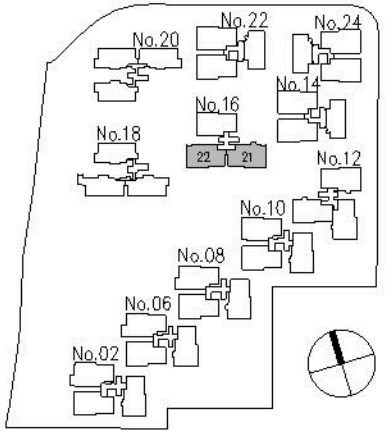

0 1m 2m 5m 10m

BUILDING PLAN REF : A1387-00356-2007-BP01, A1387-00356-2007-BP02, A1387-00356-2007-BP03, A1387-00356-2007-BP04
APRROVAL DATE : 19/04/2011, 25/01/2012, 12/06/2012, 17/12/2013

All areas stated herein include pes, water feature (private pool), private lobby, bay windows, a/c ledges, planters, balconies, roof terraces, outdoor shower and voids where applicable.
All areas and measurements stated herein are approximate and subject to adjustment on final survey. Layout / location of wardrobes, kitchen cabinets, fan coil units, electrical points, door swing positions and plaster ceiling boards are subject to Architect' s sole discretion and final design.

LEEDON RESIDENCE

4 BEDROOM TYPE 4C

247 sqm / 2,659 sqft

unit 03-13/ 22
unit 05-13/ 22
unit 07-13/ 22
unit 09-13/ 22

Mirror Unit
unit 03-21
unit 05-21
unit 07-21
unit 09-21

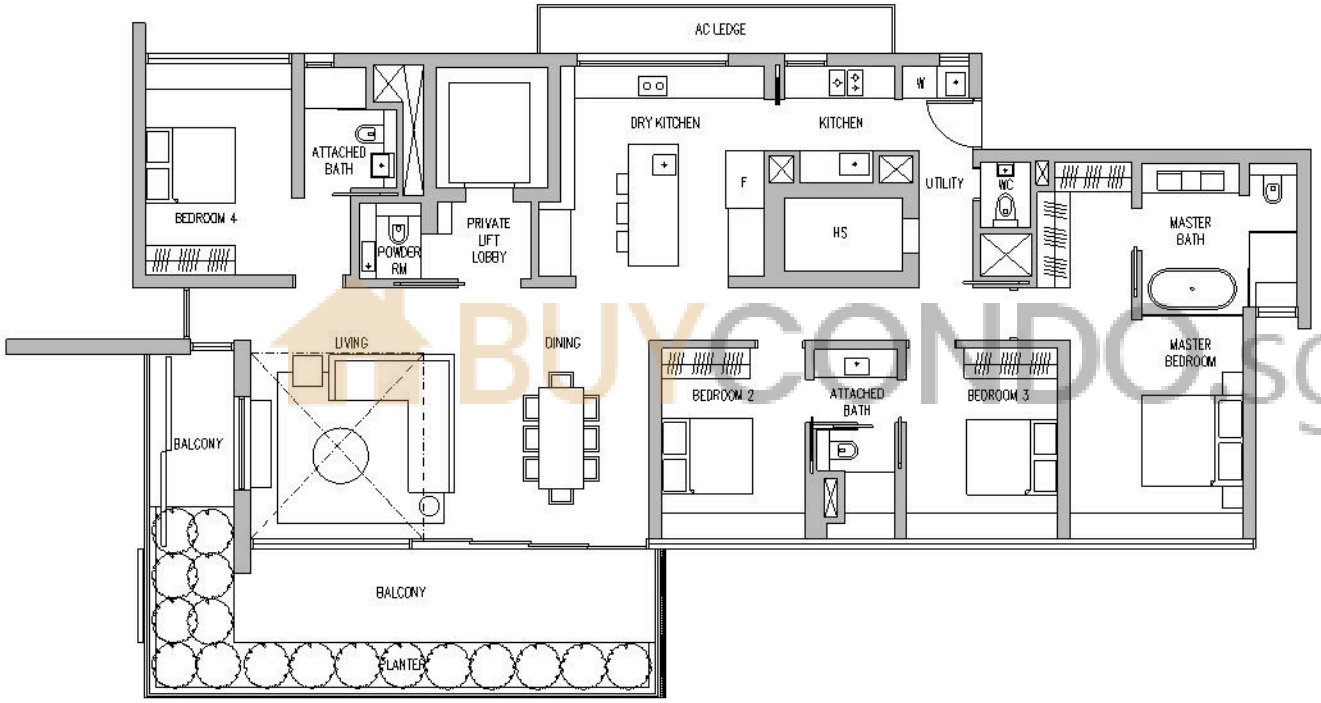

BUYCONDO.sg

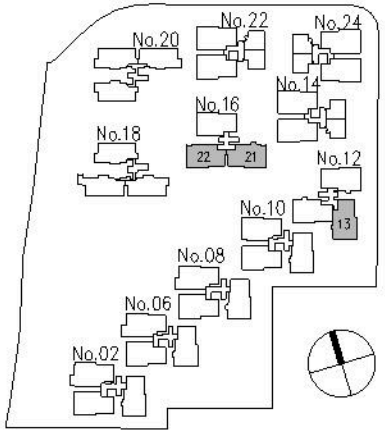

0 1m 2m 5m 10m

BUILDING PLAN REF : A1387-00356-2007-BP01, A1387-00356-2007-BP02, A1387-00356-2007-BP03, A1387-00356-2007-BP04
APRROVAL DATE : 19/04/2011, 25/01/2012, 12/06/2012, 17/12/2013

All areas stated herein include pes, water feature (private pool), private lobby, bay windows, a/c ledges, planters, balconies, roof terraces, outdoor shower and voids where applicable.
All areas and measurements stated herein are approximate and subject to adjustment on final survey. Layout / location of wardrobes, kitchen cabinets, fan coil units, electrical points, door swing positions and plaster ceiling boards are subject to Architect' s sole discretion and final design.

LEEDON RESIDENCE

SKY SUITE
4 BEDROOM
TYPE 4C-R

336 sqm / 3,617 sqft

unit 12-13

Lower Level

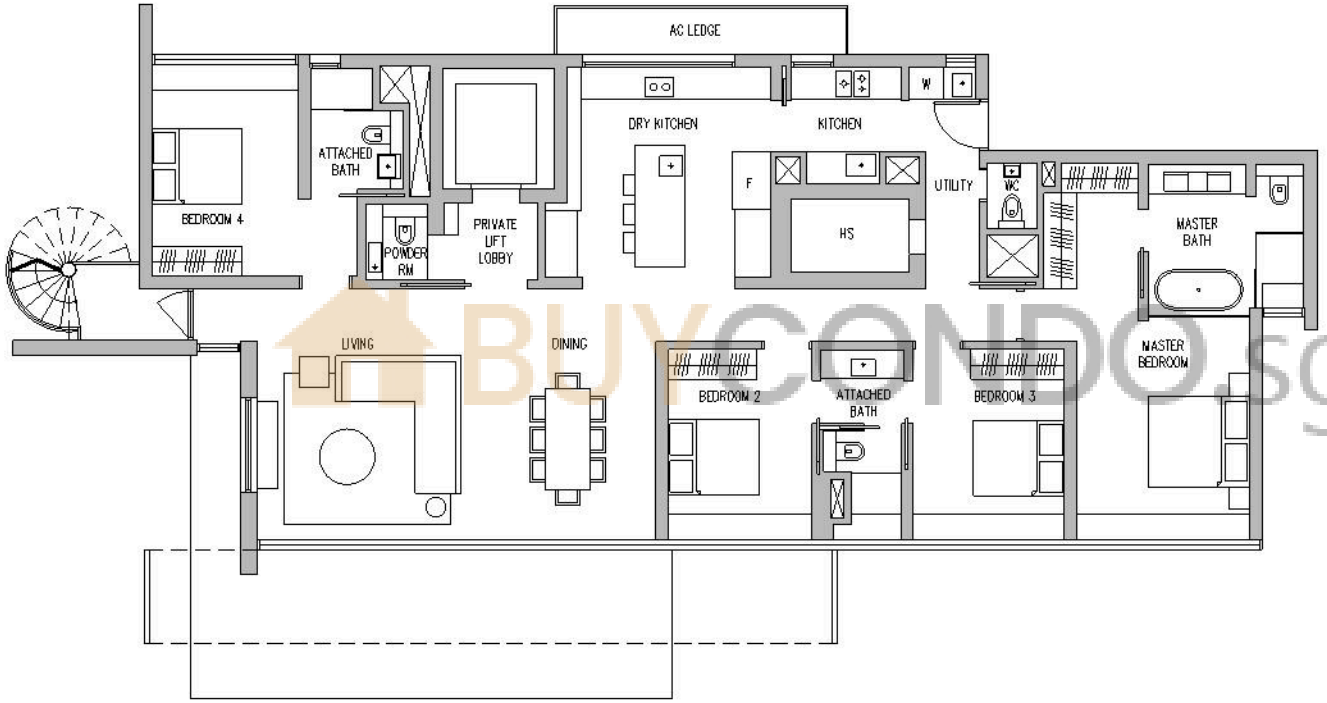

BUYCONDO.sg

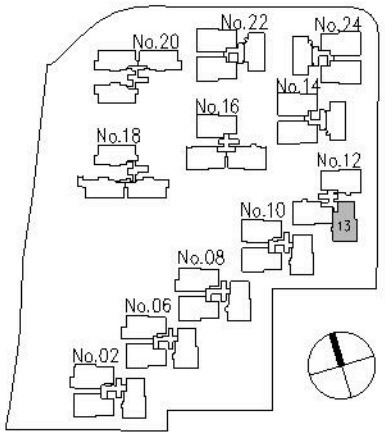

0 1m 2m 5m 10m

BUILDING PLAN REF : A1387-00356-2007-BP01, A1387-00356-2007-BP02, A1387-00356-2007-BP03, A1387-00356-2007-BP04
APRROVAL DATE : 19/04/2011, 25/01/2012, 12/06/2012, 17/12/2013

All areas stated herein include pes, water feature (private pool), private lobby, bay windows, a/c ledges, planters, balconies, roof terraces, outdoor shower and voids where applicable.
All areas and measurements stated herein are approximate and subject to adjustment on final survey. Layout / location of wardrobes, kitchen cabinets, fan coil units, electrical points, door swing positions and plaster ceiling boards are subject to Architect' s sole discretion and final design.

LEEDON RESIDENCE

SKY SUITE
4 BEDROOM
TYPE 4C-R

336 sqm / 3,617 sqft

unit 12-13

Roof Garden

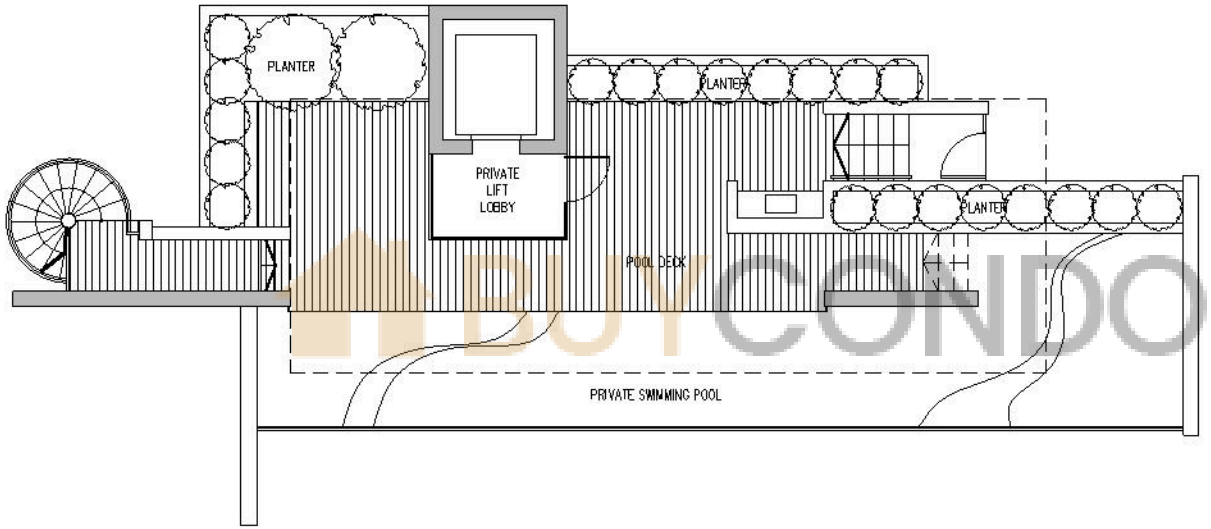

BUYCONDO.sg

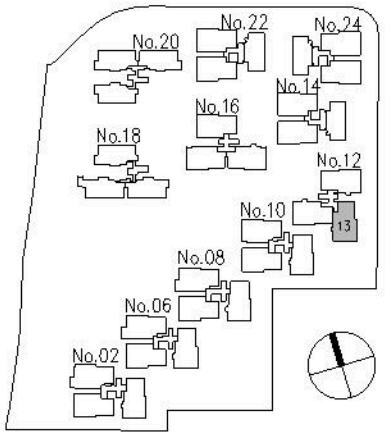

0 1m 2m 5m 10m

BUILDING PLAN REF : A1387-00356-2007-BP01, A1387-00356-2007-BP02, A1387-00356-2007-BP03, A1387-00356-2007-BP04
APRROVAL DATE : 19/04/2011, 25/01/2012, 12/06/2012, 17/12/2013

All areas stated herein include pes, water feature (private pool), private lobby, bay windows, a/c ledges, planters, balconies, roof terraces, outdoor shower and voids where applicable.
All areas and measurements stated herein are approximate and subject to adjustment on final survey. Layout / location of wardrobes, kitchen cabinets, fan coil units, electrical points, door swing positions and plaster ceiling boards are subject to Architect' s sole discretion and final design.

LEEDON RESIDENCE

4 BEDROOM
TYPE 4D-H

232 sqm / 2,497 sqft

unit 11-04 / 07 / 10

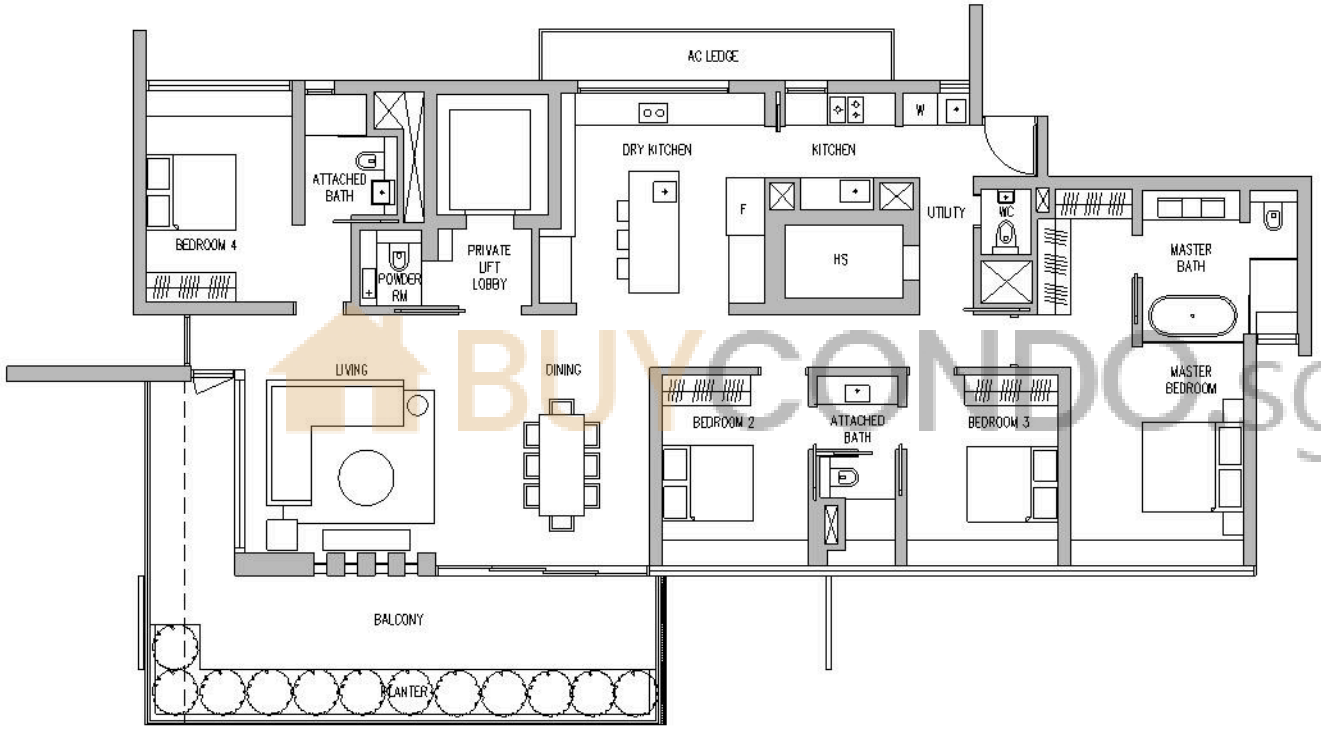

BUYCONDO.sg

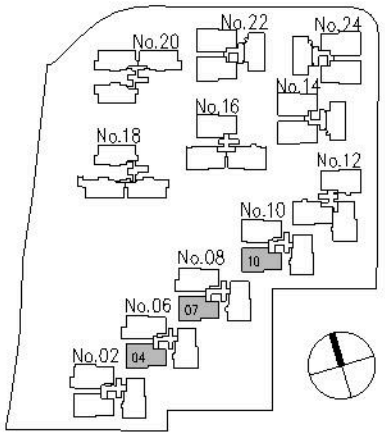

0 1m 2m 5m 10m

BUILDING PLAN REF : A1387-00356-2007-BP01, A1387-00356-2007-BP02, A1387-00356-2007-BP03, A1387-00356-2007-BP04
APRROVAL DATE : 19/04/2011, 25/01/2012, 12/06/2012, 17/12/2013

All areas stated herein include pes, water feature (private pool), private lobby, bay windows, a/c ledges, planters, balconies, roof terraces, outdoor shower and voids where applicable.
All areas and measurements stated herein are approximate and subject to adjustment on final survey. Layout / location of wardrobes, kitchen cabinets, fan coil units, electrical points, door swing positions and plaster ceiling boards are subject to Architect' s sole discretion and final design.

LEEDON RESIDENCE

4 BEDROOM TYPE 4D

247 sqm / 2,659 sqft

unit 03-04 / 07 / 10
unit 05-04 / 07 / 10
unit 07-04 / 07 / 10
unit 09-04 / 07 / 10

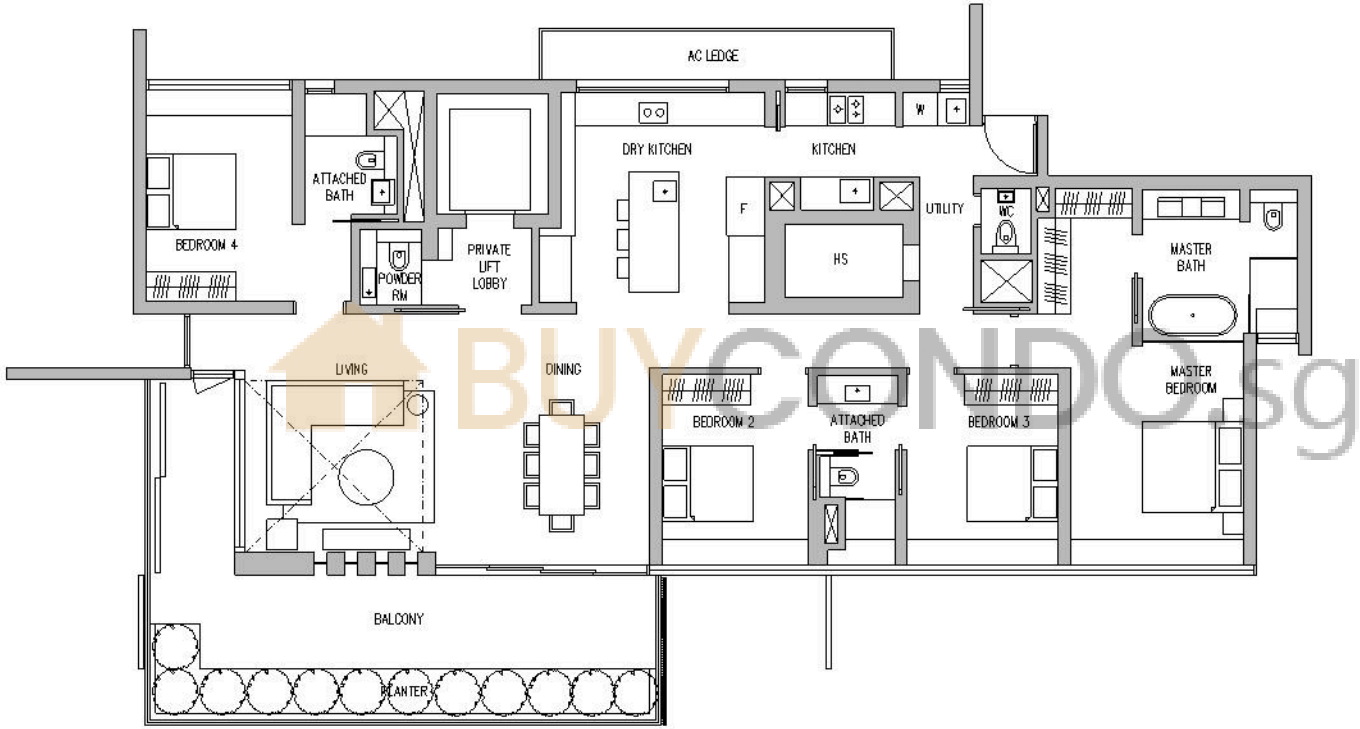

BUYCONDO.sg

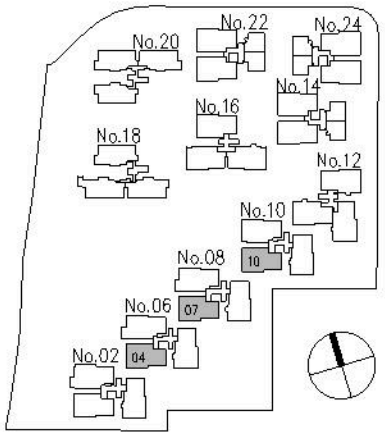

0 1m 2m 5m 10m

BUILDING PLAN REF : A1387-00356-2007-BP01, A1387-00356-2007-BP02, A1387-00356-2007-BP03, A1387-00356-2007-BP04
APRROVAL DATE : 19/04/2011, 25/01/2012, 12/06/2012, 17/12/2013

All areas stated herein include pes, water feature (private pool), private lobby, bay windows, a/c ledges, planters, balconies, roof terraces, outdoor shower and voids where applicable.
All areas and measurements stated herein are approximate and subject to adjustment on final survey. Layout / location of wardrobes, kitchen cabinets, fan coil units, electrical points, door swing positions and plaster ceiling boards are subject to Architect' s sole discretion and final design.

LEEDON RESIDENCE

SKY SUITE
4 BEDROOM
TYPE 4D-R

350 sqm / 3,767 sqft

unit 12-04 / 07 / 10

Lower Level

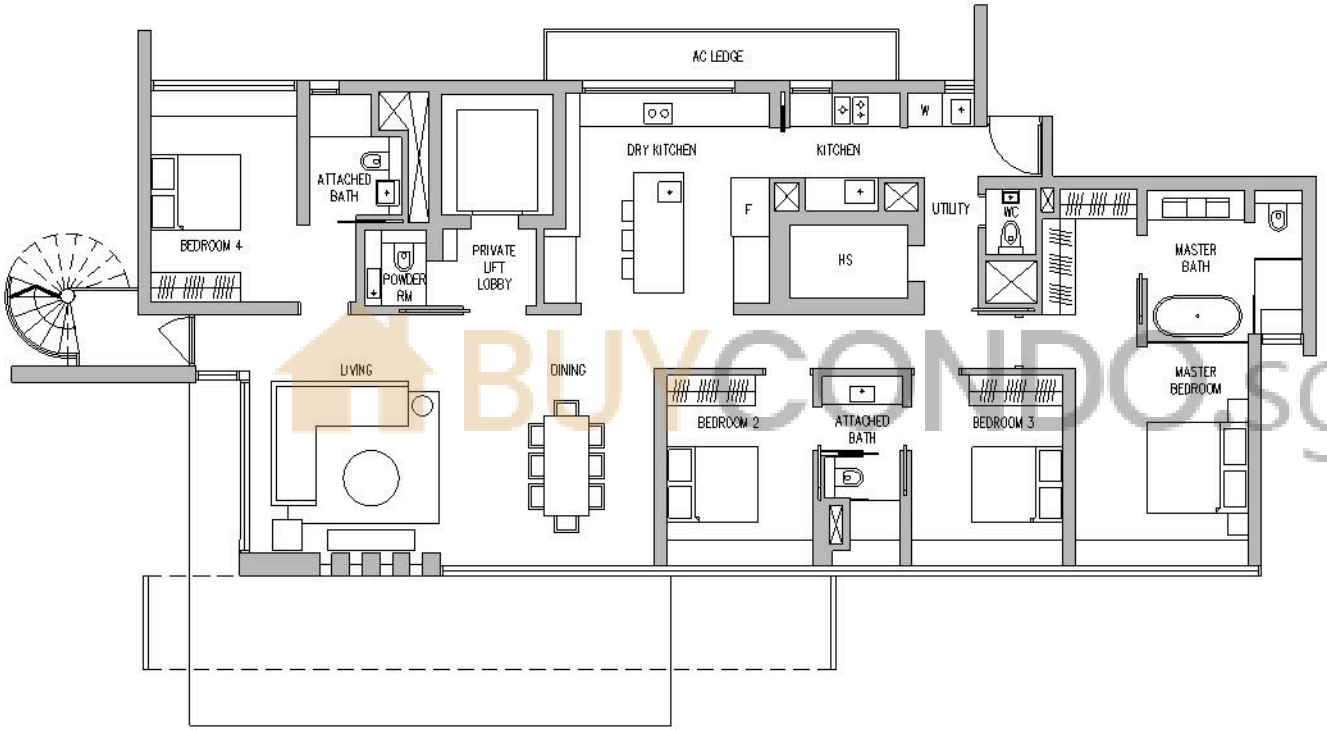

BUYCONDO.sg

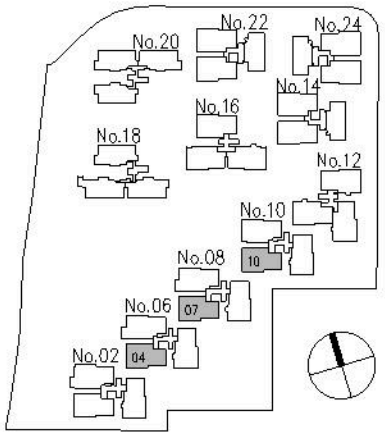

0 1m 2m 5m 10m

BUILDING PLAN REF : A1387-00356-2007-BP01, A1387-00356-2007-BP02, A1387-00356-2007-BP03, A1387-00356-2007-BP04
APRROVAL DATE : 19/04/2011, 25/01/2012, 12/06/2012, 17/12/2013

All areas stated herein include pes, water feature (private pool), private lobby, bay windows, a/c ledges, planters, balconies, roof terraces, outdoor shower and voids where applicable.
All areas and measurements stated herein are approximate and subject to adjustment on final survey. Layout / location of wardrobes, kitchen cabinets, fan coil units, electrical points, door swing positions and plaster ceiling boards are subject to Architect' s sole discretion and final design.

LEEDON RESIDENCE

SKY SUITE
4 BEDROOM
TYPE 4D-R

350 sqm / 3,767 sqft

unit 12-04 / 07 / 10

Roof Garden

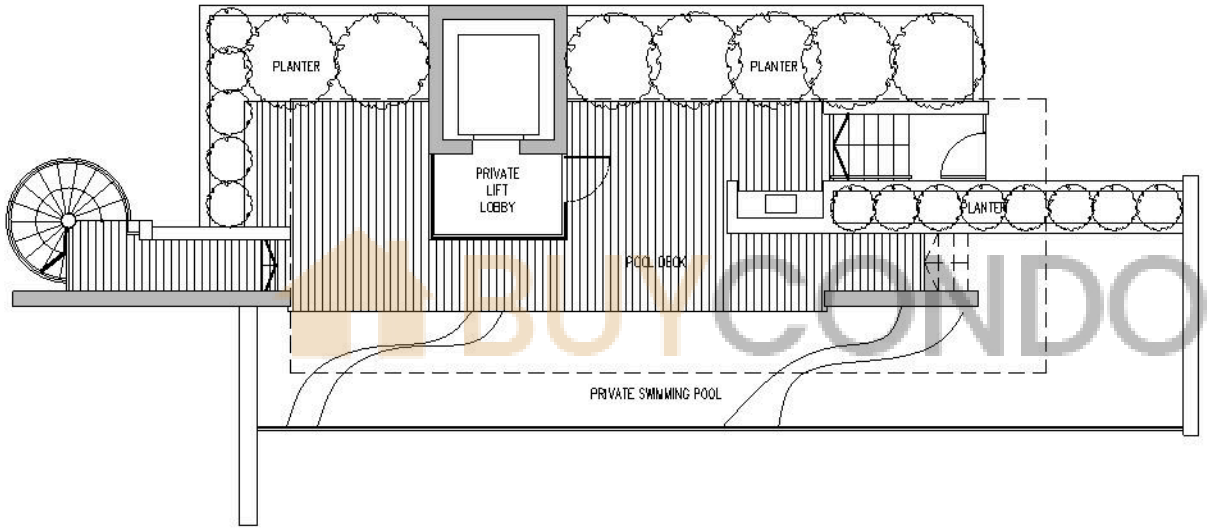

BUYCONDO.sg

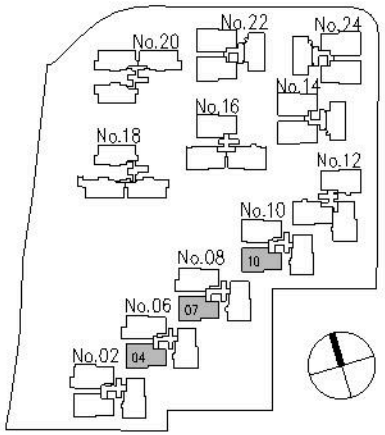

0 1m 2m 5m 10m

BUILDING PLAN REF : A1387-00356-2007-BP01, A1387-00356-2007-BP02, A1387-00356-2007-BP03, A1387-00356-2007-BP04
APRROVAL DATE : 19/04/2011, 25/01/2012, 12/06/2012, 17/12/2013

All areas stated herein include pes, water feature (private pool), private lobby, bay windows, a/c ledges, planters, balconies, roof terraces, outdoor shower and voids where applicable.
All areas and measurements stated herein are approximate and subject to adjustment on final survey. Layout / location of wardrobes, kitchen cabinets, fan coil units, electrical points, door swing positions and plaster ceiling boards are subject to Architect' s sole discretion and final design.

LEEDON RESIDENCE

4 BEDROOM
TYPE 4E-H

232 sqm / 2,497 sqft

unit 11-14

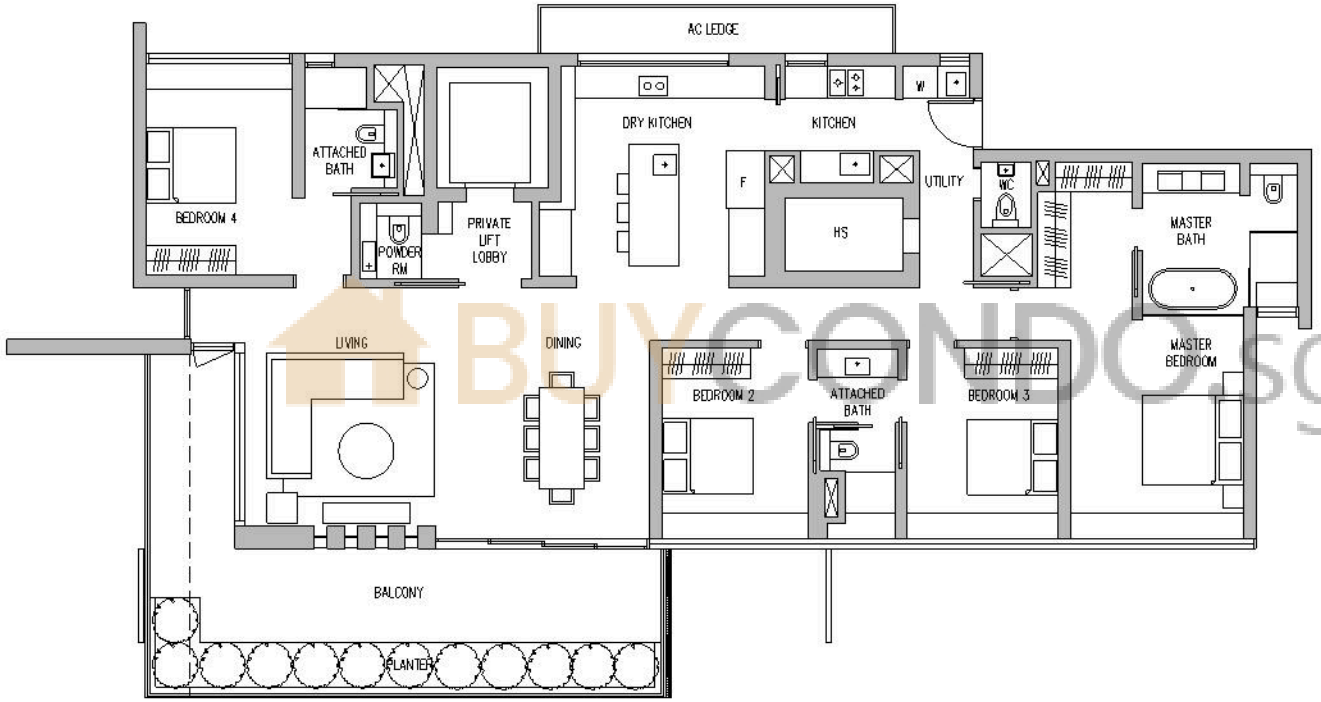

BUYCONDO.sg

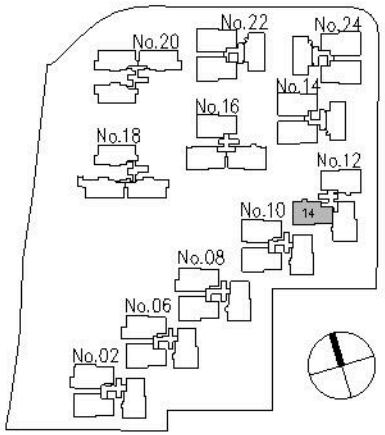

0 1m 2m 5m 10m

BUILDING PLAN REF : A1387-00356-2007-BP01, A1387-00356-2007-BP02, A1387-00356-2007-BP03, A1387-00356-2007-BP04
APRROVAL DATE : 19/04/2011, 25/01/2012, 12/06/2012, 17/12/2013

All areas stated herein include pes, water feature (private pool), private lobby, bay windows, a/c ledges, planters, balconies, roof terraces, outdoor shower and voids where applicable.
All areas and measurements stated herein are approximate and subject to adjustment on final survey. Layout / location of wardrobes, kitchen cabinets, fan coil units, electrical points, door swing positions and plaster ceiling boards are subject to Architect' s sole discretion and final design.

LEEDON RESIDENCE

GARDEN SUITE
4 BEDROOM
TYPE 4E-P1

345 sqm / 3,714 sqft

unit 01-14

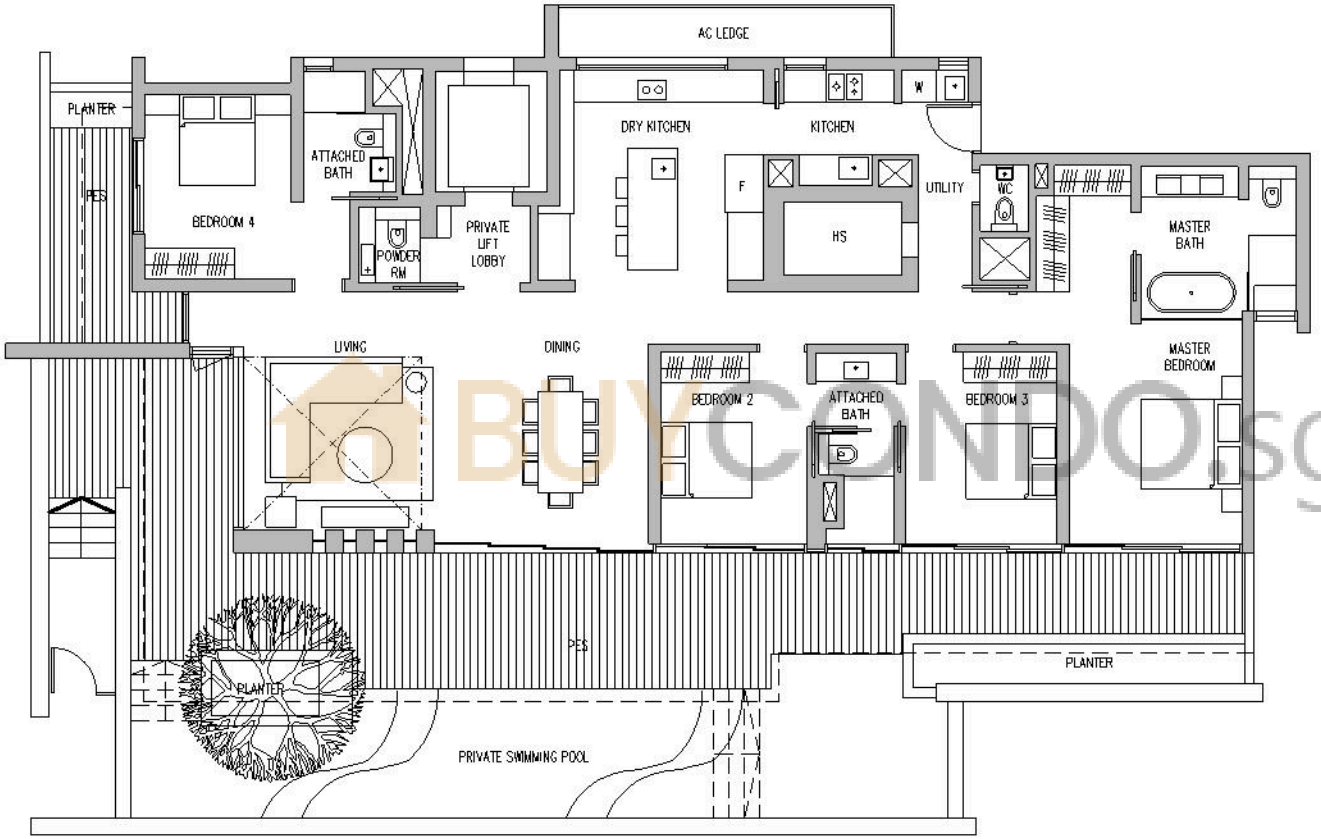

BUYCONDO.sg

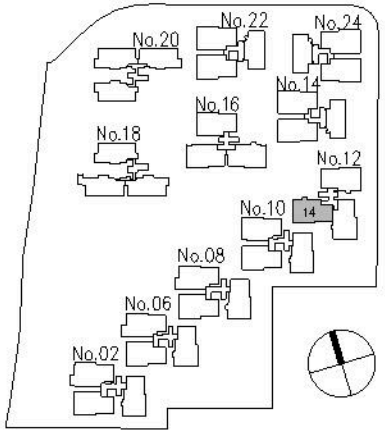

0 1m 2m 5m 10m

BUILDING PLAN REF : A1387-00356-2007-BP01, A1387-00356-2007-BP02, A1387-00356-2007-BP03, A1387-00356-2007-BP04
APRROVAL DATE : 19/04/2011, 25/01/2012, 12/06/2012, 17/12/2013

All areas stated herein include pes, water feature (private pool), private lobby, bay windows, a/c ledges, planters, balconies, roof terraces, outdoor shower and voids where applicable.
All areas and measurements stated herein are approximate and subject to adjustment on final survey. Layout / location of wardrobes, kitchen cabinets, fan coil units, electrical points, door swing positions and plaster ceiling boards are subject to Architect' s sole discretion and final design.

LEEDON RESIDENCE

4 BEDROOM
TYPE 4E

247 sqm / 2,659 sqft

unit 03-14
unit 05-14
unit 07-14
unit 09-14

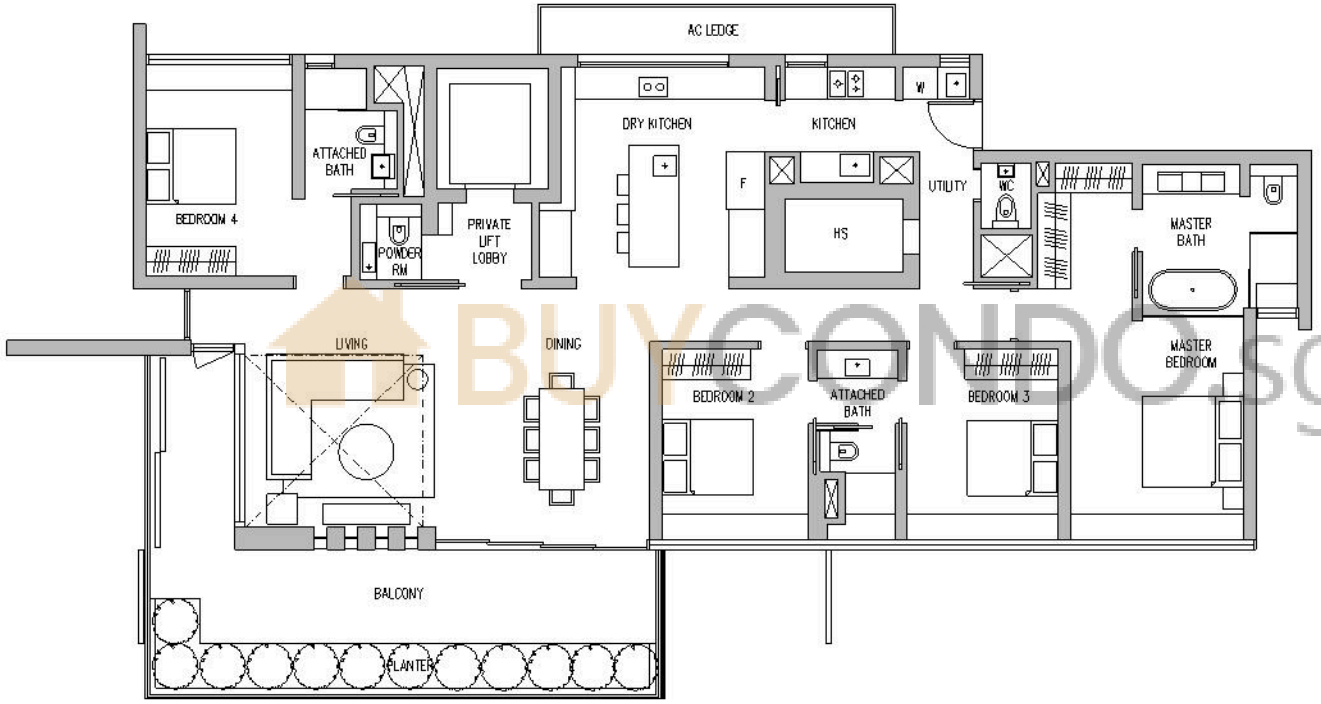

BUYCONDO.sg

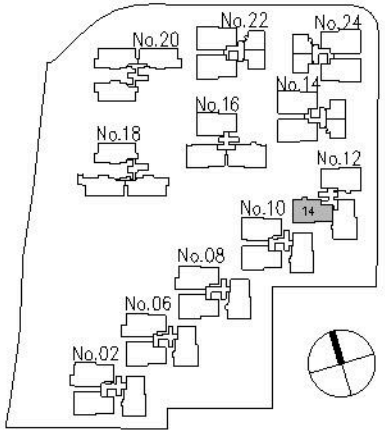

0 1m 2m 5m 10m

BUILDING PLAN REF : A1387-00356-2007-BP01, A1387-00356-2007-BP02, A1387-00356-2007-BP03, A1387-00356-2007-BP04
APRROVAL DATE : 19/04/2011, 25/01/2012, 12/06/2012, 17/12/2013

All areas stated herein include pes, water feature (private pool), private lobby, bay windows, a/c ledges, planters, balconies, roof terraces, outdoor shower and voids where applicable.
All areas and measurements stated herein are approximate and subject to adjustment on final survey. Layout / location of wardrobes, kitchen cabinets, fan coil units, electrical points, door swing positions and plaster ceiling boards are subject to Architect' s sole discretion and final design.

LEEDON RESIDENCE

SKY SUITE
4 BEDROOM
TYPE 4E-R

342 sqm / 3,681 sqft

unit 12-14

Lower Level

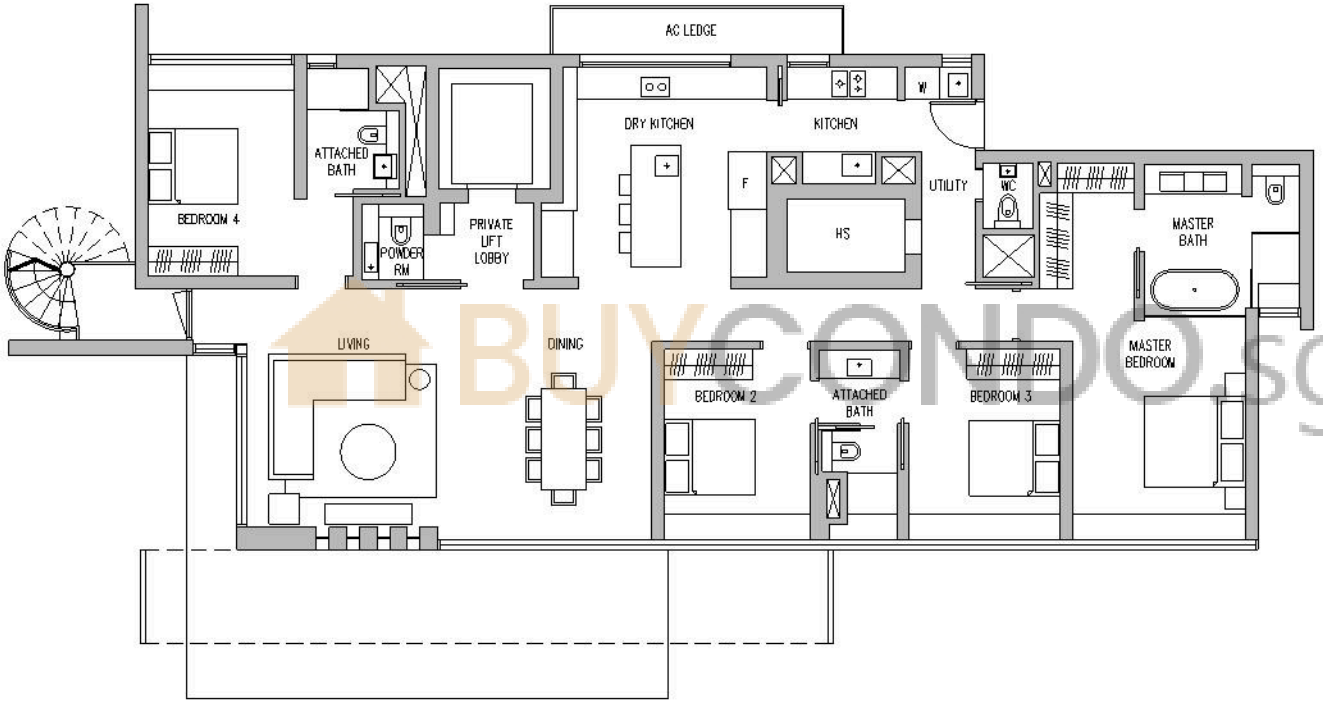

BUYCONDO.sg

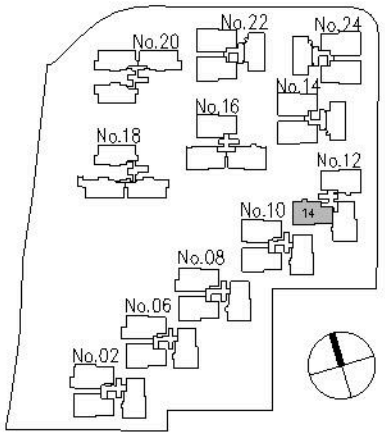

0 1m 2m 5m 10m

BUILDING PLAN REF : A1387-00356-2007-BP01, A1387-00356-2007-BP02, A1387-00356-2007-BP03, A1387-00356-2007-BP04
APRROVAL DATE : 19/04/2011, 25/01/2012, 12/06/2012, 17/12/2013

All areas stated herein include pes, water feature (private pool), private lobby, bay windows, a/c ledges, planters, balconies, roof terraces, outdoor shower and voids where applicable.
All areas and measurements stated herein are approximate and subject to adjustment on final survey. Layout / location of wardrobes, kitchen cabinets, fan coil units, electrical points, door swing positions and plaster ceiling boards are subject to Architect' s sole discretion and final design.

LEEDON RESIDENCE

SKY SUITE
4 BEDROOM
TYPE 4E-R

342 sqm / 3,681 sqft

unit 12-14

Roof Garden

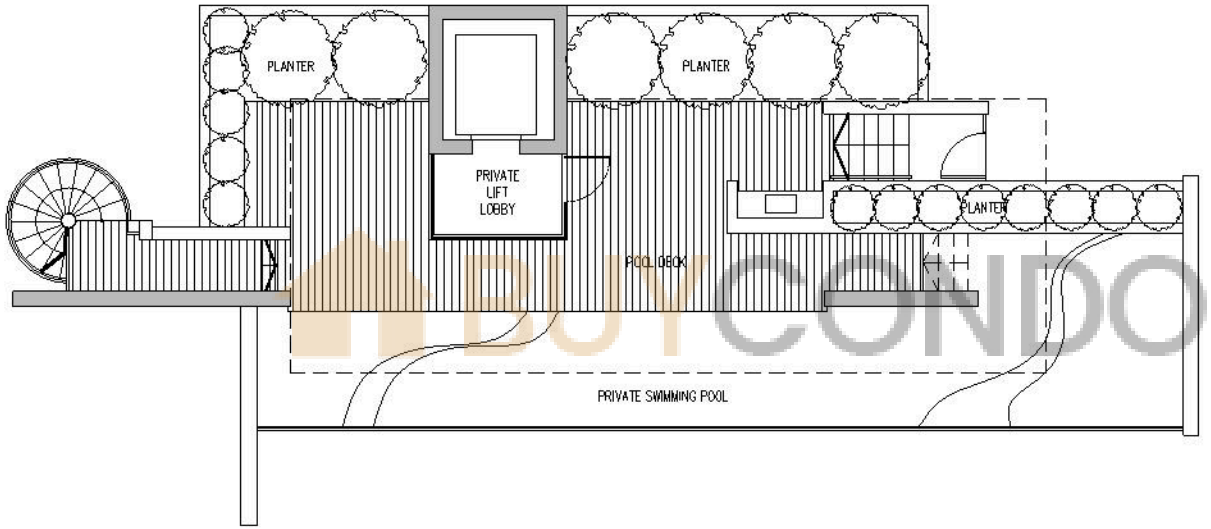

BUYCONDO.sg

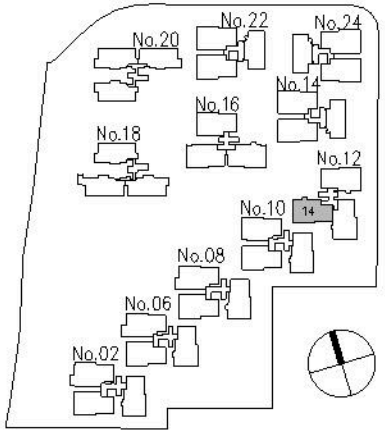

0 1m 2m 5m 10m

BUILDING PLAN REF : A1387-00356-2007-BP01, A1387-00356-2007-BP02, A1387-00356-2007-BP03, A1387-00356-2007-BP04
APRROVAL DATE : 19/04/2011, 25/01/2012, 12/06/2012, 17/12/2013

All areas stated herein include pes, water feature (private pool), private lobby, bay windows, a/c ledges, planters, balconies, roof terraces, outdoor shower and voids where applicable.
All areas and measurements stated herein are approximate and subject to adjustment on final survey. Layout / location of wardrobes, kitchen cabinets, fan coil units, electrical points, door swing positions and plaster ceiling boards are subject to Architect' s sole discretion and final design.

LEEDON RESIDENCE

GARDEN SUITE
5 BEDROOM
TYPE 5A-P1

610 sqm / 6,566 sqft

unit 01-23

Mirror Unit
unit 01-25

Lower Level

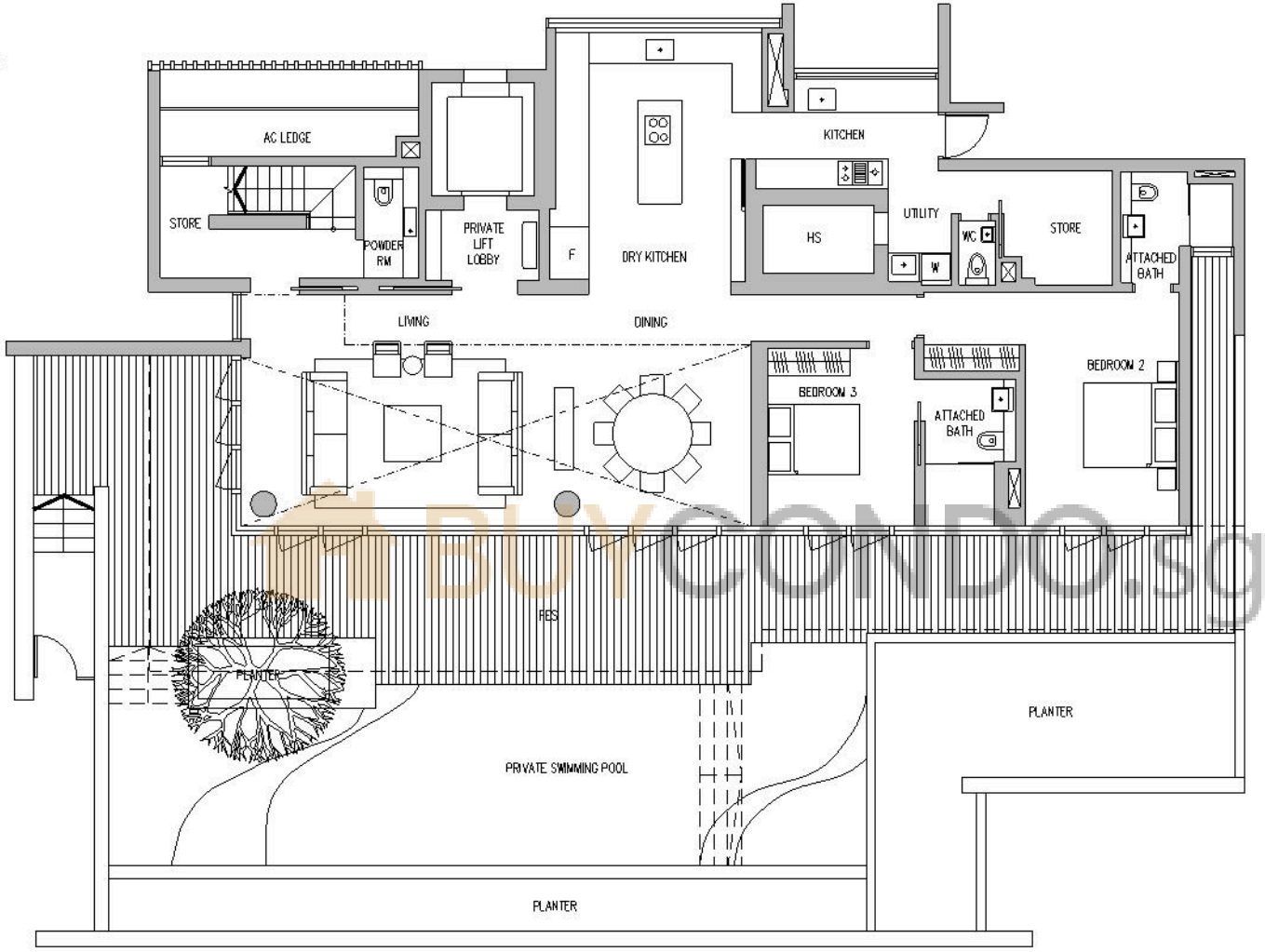

BUYCONDO.sg

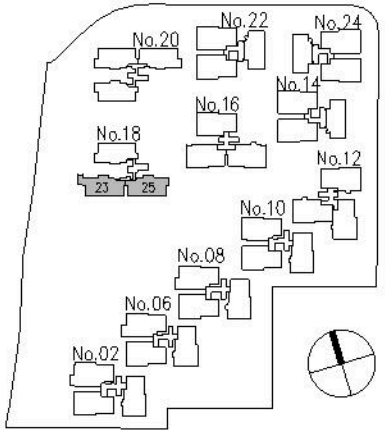

0 1m 2m 5m 10m

BUILDING PLAN REF : A1387-00356-2007-BP01, A1387-00356-2007-BP02, A1387-00356-2007-BP03, A1387-00356-2007-BP04
APRROVAL DATE : 19/04/2011, 25/01/2012, 12/06/2012, 17/12/2013

All areas stated herein include pes, water feature (private pool), private lobby, bay windows, a/c ledges, planters, balconies, roof terraces, outdoor shower and voids where applicable.
All areas and measurements stated herein are approximate and subject to adjustment on final survey. Layout / location of wardrobes, kitchen cabinets, fan coil units, electrical points, door swing positions and plaster ceiling boards are subject to Architect' s sole discretion and final design.

LEEDON RESIDENCE

5 BEDROOM TYPE 5A

437 sqm / 4,704 sqft

unit 03-23 / 26 / 27
unit 05-23 / 26 / 27
unit 07-23 / 26 / 27
unit 09-23 / 26 / 27

Mirror Unit
unit 03-24/ 25 / 28
unit 05-24/ 25 / 28
unit 07-24/ 25 / 28
unit 09-24/ 25/ 28

Lower Level

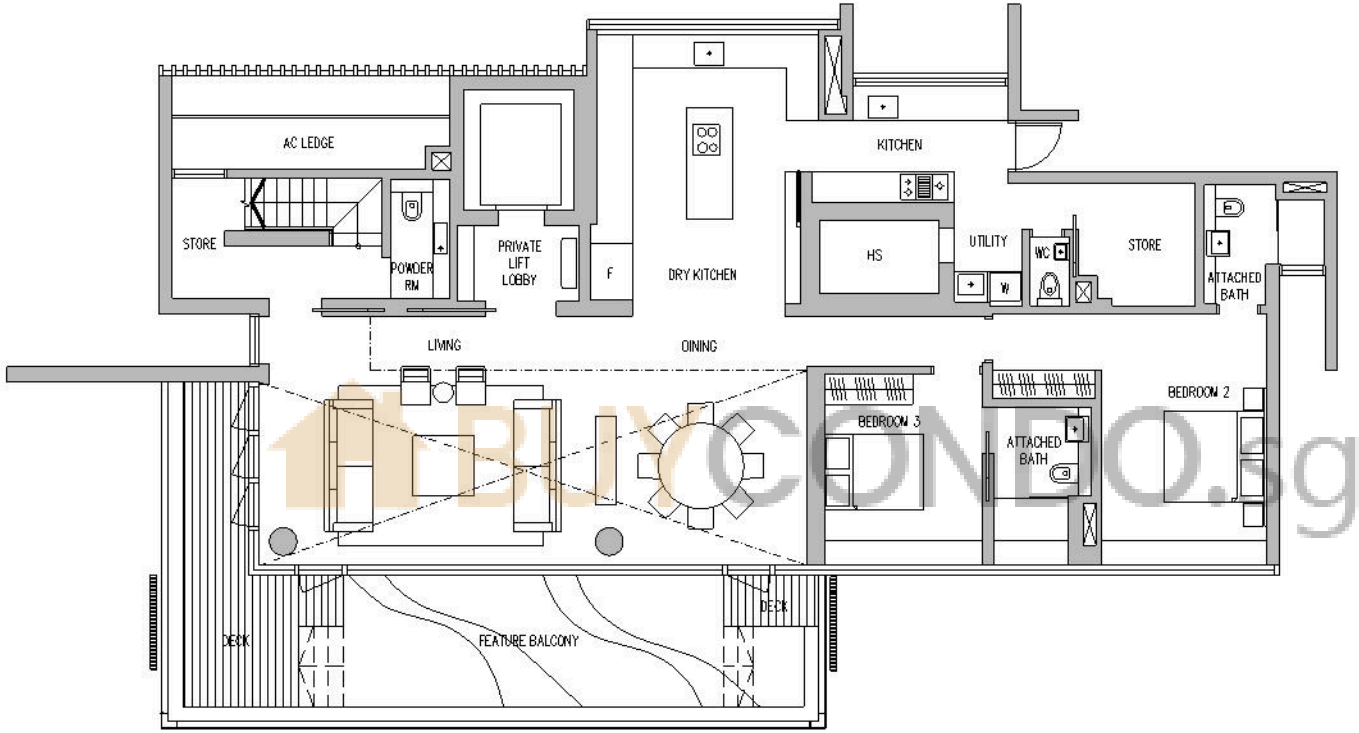

BUYCONDO.sg

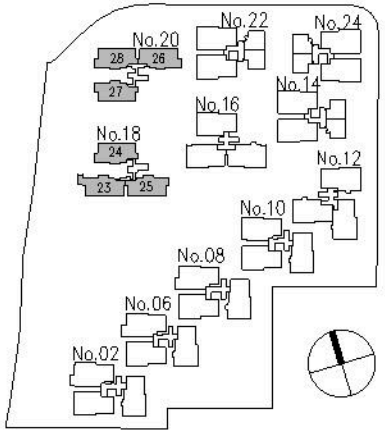

0 1m 2m 5m 10m

BUILDING PLAN REF : A1387-00356-2007-BP01, A1387-00356-2007-BP02, A1387-00356-2007-BP03, A1387-00356-2007-BP04
APRROVAL DATE : 19/04/2011, 25/01/2012, 12/06/2012, 17/12/2013

All areas stated herein include pes, water feature (private pool), private lobby, bay windows, a/c ledges, planters, balconies, roof terraces, outdoor shower and voids where applicable.
All areas and measurements stated herein are approximate and subject to adjustment on final survey. Layout / location of wardrobes, kitchen cabinets, fan coil units, electrical points, door swing positions and plaster ceiling boards are subject to Architect' s sole discretion and final design.

LEEDON RESIDENCE

5 BEDROOM TYPE 5A

437 sqm / 4,704 sqft

unit 03-23 / 26 / 27
unit 05-23 / 26 / 27
unit 07-23 / 26 / 27
unit 09-23 / 26 / 27

Mirror Unit
unit 03-24/ 25 / 28
unit 05-24/ 25 / 28
unit 07-24/ 25 / 28
unit 09-24/ 25/ 28

Upper Level

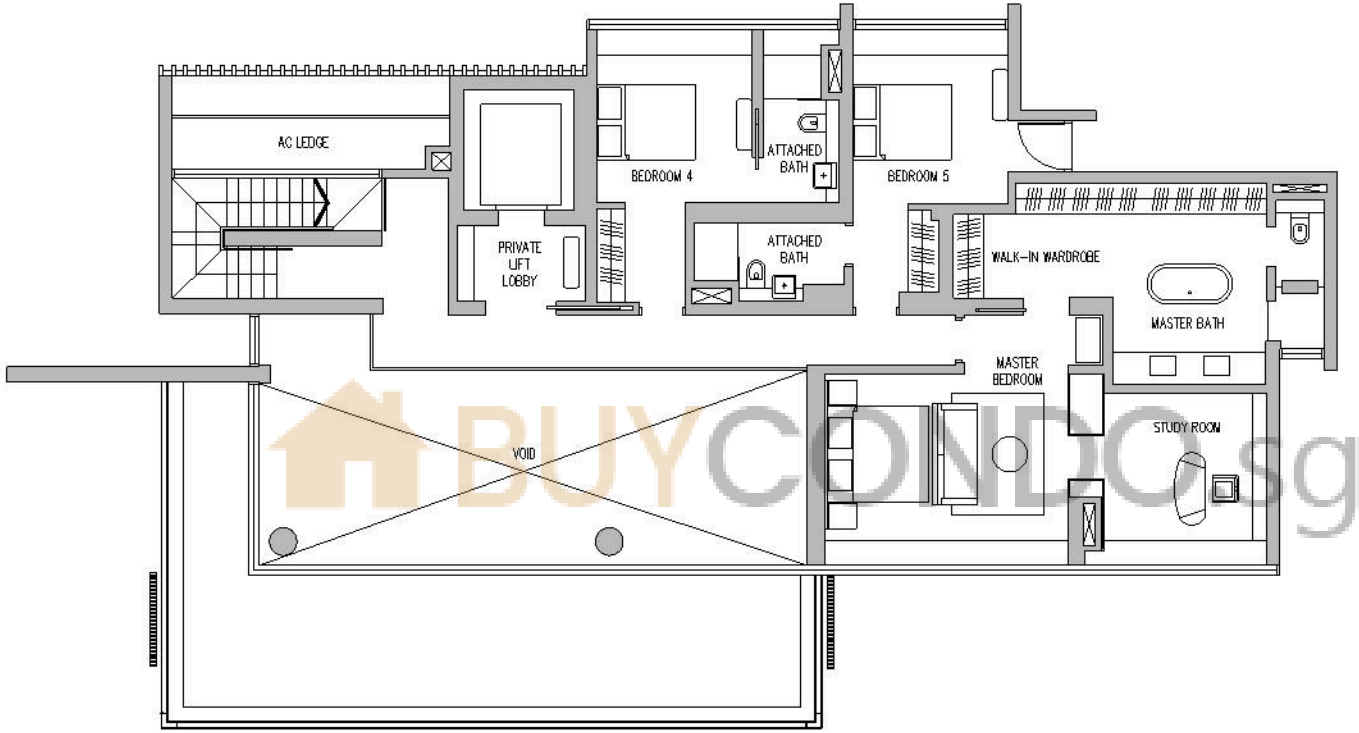

BUYCONDO.sg

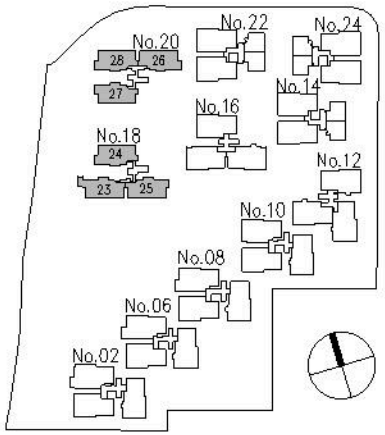

0 1m 2m 5m 10m

BUILDING PLAN REF : A1387-00356-2007-BP01, A1387-00356-2007-BP02, A1387-00356-2007-BP03, A1387-00356-2007-BP04
APRROVAL DATE : 19/04/2011, 25/01/2012, 12/06/2012, 17/12/2013

All areas stated herein include pes, water feature (private pool), private lobby, bay windows, a/c ledges, planters, balconies, roof terraces, outdoor shower and voids where applicable.
All areas and measurements stated herein are approximate and subject to adjustment on final survey. Layout / location of wardrobes, kitchen cabinets, fan coil units, electrical points, door swing positions and plaster ceiling boards are subject to Architect' s sole discretion and final design.

LEEDON RESIDENCE

PENTHOUSE
5 BEDROOM
TYPE PH1

529 sqm / 5,694 sqft

unit 11-11

Lower Level

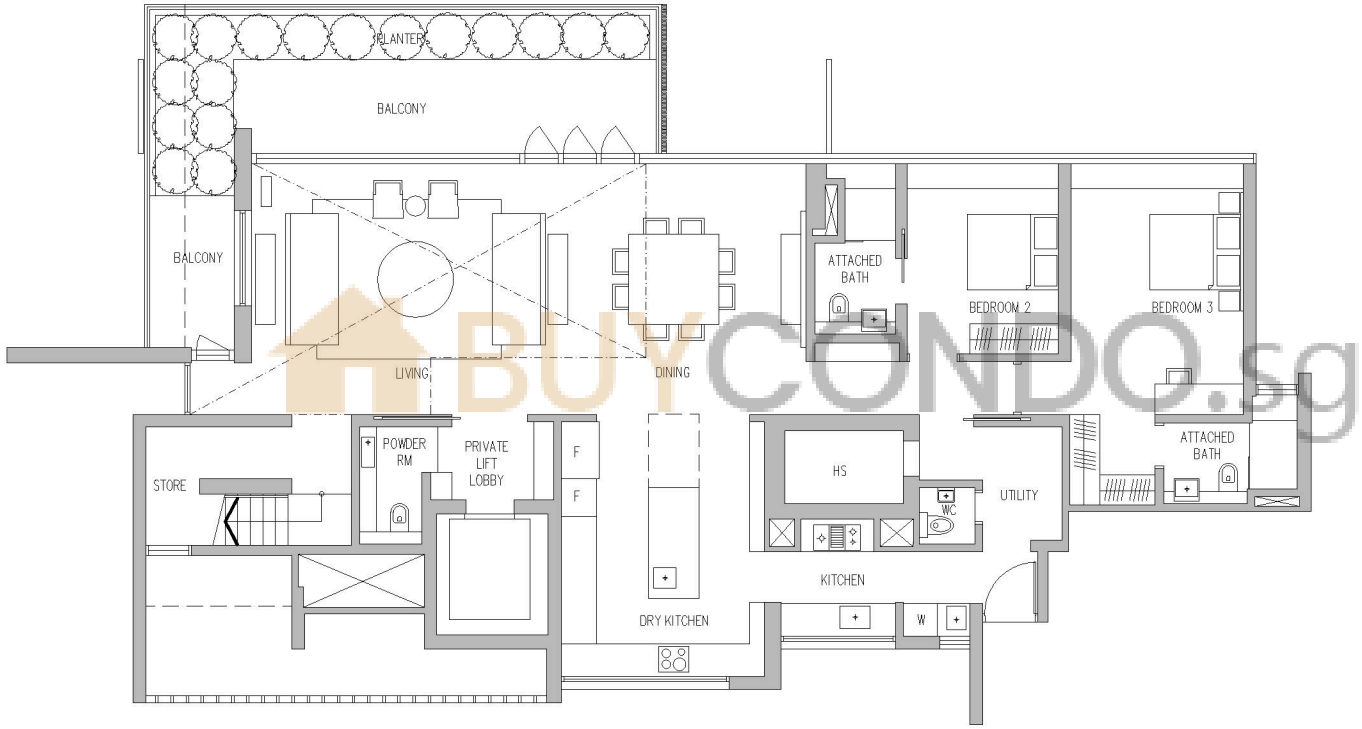

BUYCONDO.sg

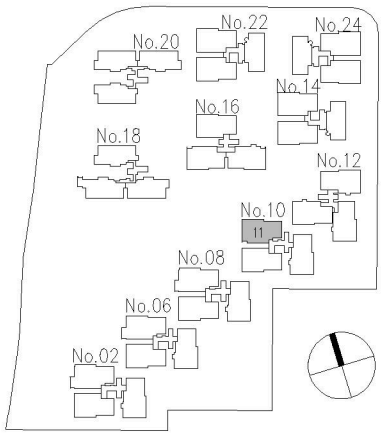

0 1m 2m 5m 10m

BUILDING PLAN REF : A1387-00356-2007-BP01, A1387-00356-2007-BP02, A1387-00356-2007-BP03, A1387-00356-2007-BP04
APRROVAL DATE : 19/04/2011, 25/01/2012, 12/06/2012, 17/12/2013

All areas stated herein include pes, water feature (private pool), private lobby, bay windows, a/c ledges, planters, balconies, roof terraces, outdoor shower and voids where applicable.
All areas and measurements stated herein are approximate and subject to adjustment on final survey. Layout / location of wardrobes, kitchen cabinets, fan coil units, electrical points, door swing positions and plaster ceiling boards are subject to Architect' s sole discretion and final design.

LEEDON RESIDENCE

PENTHOUSE
5 BEDROOM
TYPE PH1

529 sqm / 5,694 sqft

unit 11-11

Upper Level

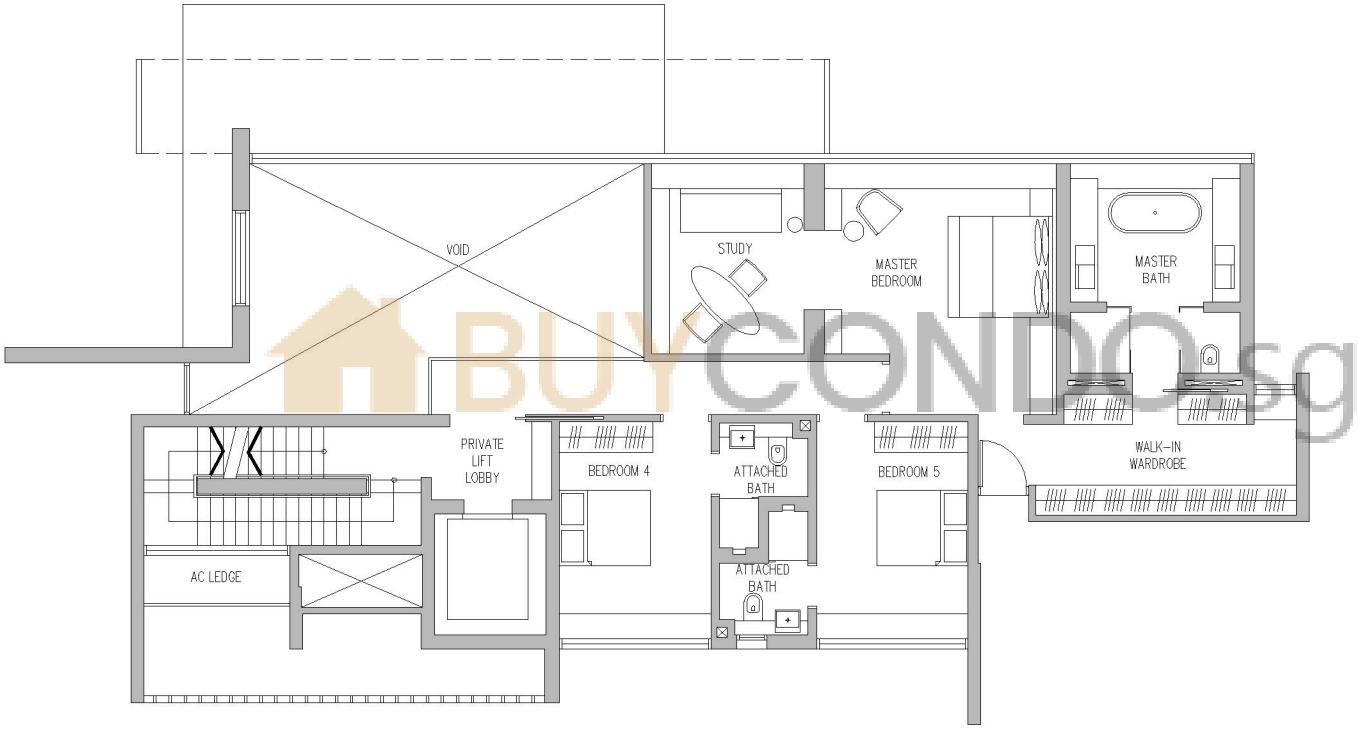

BUYCONDO.sg

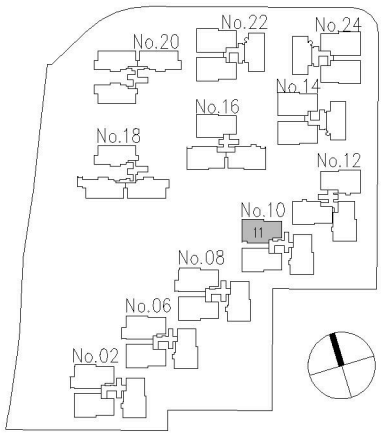

0 1m 2m 5m 10m

BUILDING PLAN REF : A1387-00356-2007-BP01, A1387-00356-2007-BP02, A1387-00356-2007-BP03, A1387-00356-2007-BP04
APRROVAL DATE : 19/04/2011, 25/01/2012, 12/06/2012, 17/12/2013

All areas stated herein include pes, water feature (private pool), private lobby, bay windows, a/c ledges, planters, balconies, roof terraces, outdoor shower and voids where applicable.
All areas and measurements stated herein are approximate and subject to adjustment on final survey. Layout / location of wardrobes, kitchen cabinets, fan coil units, electrical points, door swing positions and plaster ceiling boards are subject to Architect' s sole discretion and final design.

LEEDON RESIDENCE

PENTHOUSE
5 BEDROOM
TYPE PH1

529 sqm / 5,694 sqft

unit 11-11

Roof Garden

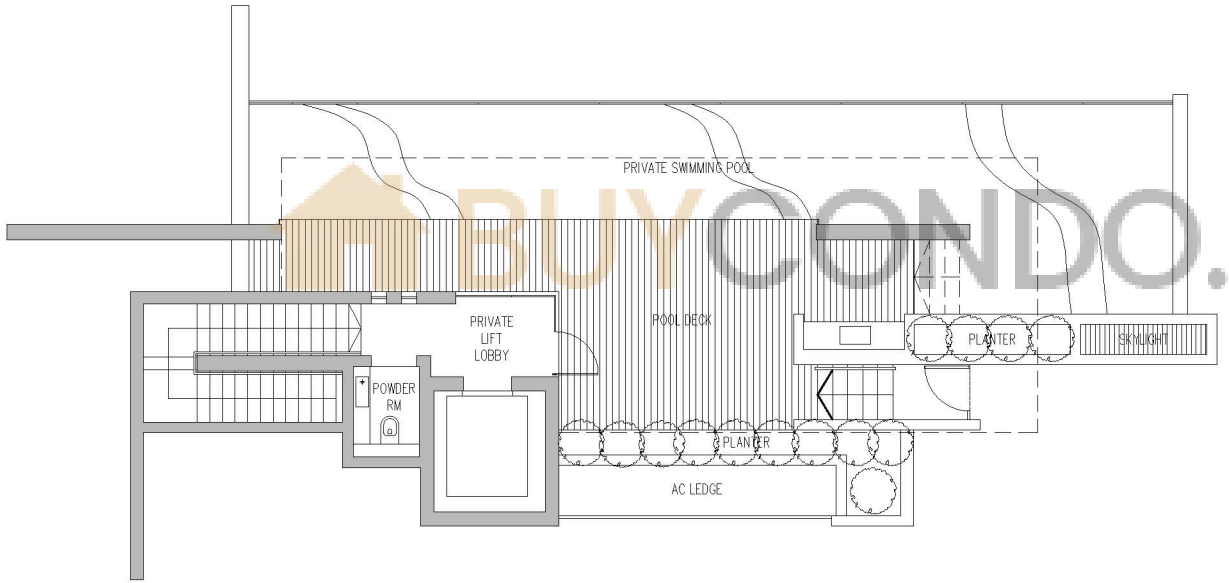

BUYCONDO.sg

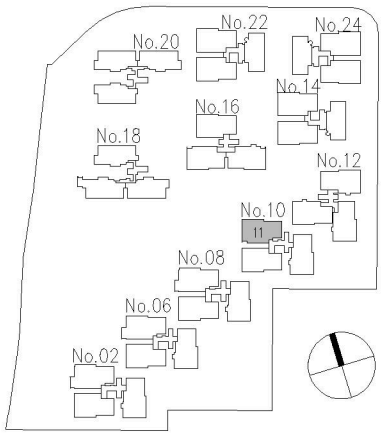

0 1m 2m 5m 10m

BUILDING PLAN REF : A1387-00356-2007-BP01, A1387-00356-2007-BP02, A1387-00356-2007-BP03, A1387-00356-2007-BP04
APRROVAL DATE : 19/04/2011, 25/01/2012, 12/06/2012, 17/12/2013

All areas stated herein include pes, water feature (private pool), private lobby, bay windows, a/c ledges, planters, balconies, roof terraces, outdoor shower and voids where applicable.
All areas and measurements stated herein are approximate and subject to adjustment on final survey. Layout / location of wardrobes, kitchen cabinets, fan coil units, electrical points, door swing positions and plaster ceiling boards are subject to Architect' s sole discretion and final design.

LEEDON RESIDENCE

PENTHOUSE
5 BEDROOM
TYPE PH2

529 sqm / 5,694 sqft

unit 11-22

Mirror Unit
unit 11-21

Lower Level

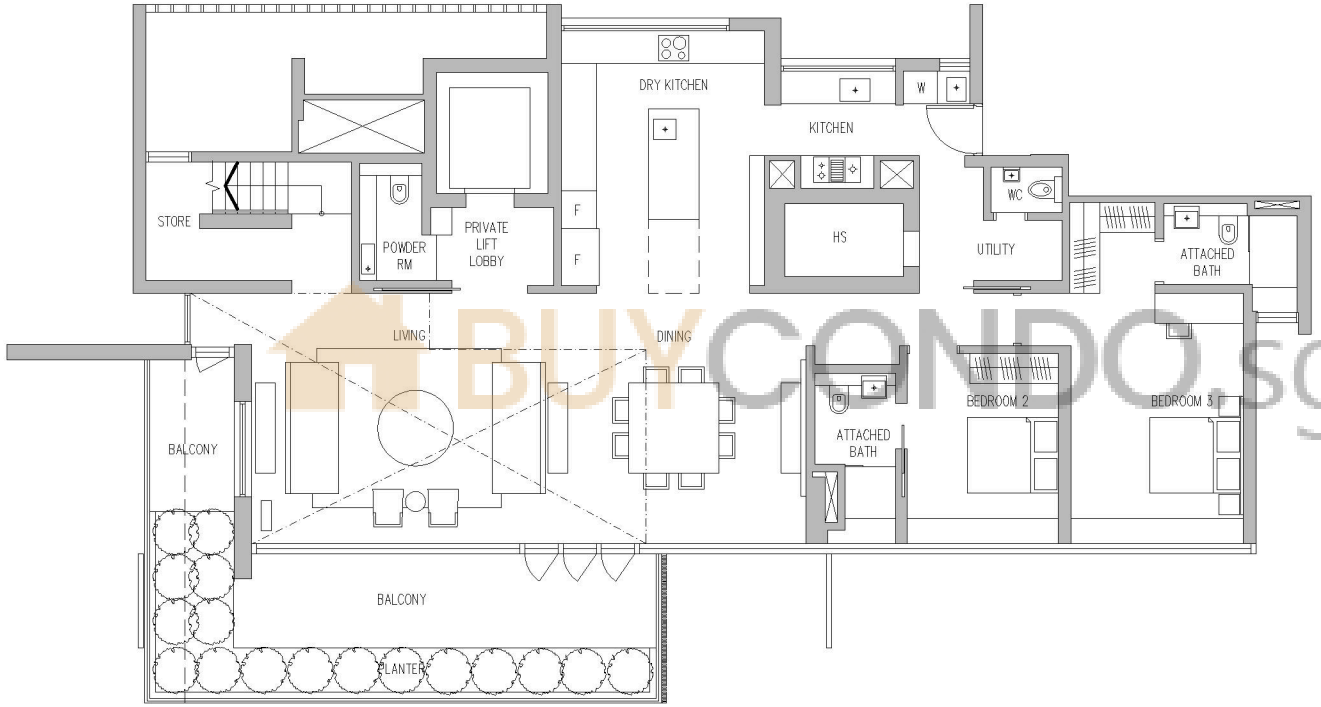

BUYCONDO.sg

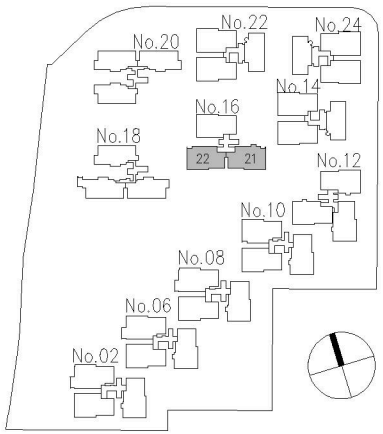

0 1m 2m 5m 10m

BUILDING PLAN REF : A1387-00356-2007-BP01, A1387-00356-2007-BP02, A1387-00356-2007-BP03, A1387-00356-2007-BP04
APRROVAL DATE : 19/04/2011, 25/01/2012, 12/06/2012, 17/12/2013

All areas stated herein include pes, water feature (private pool), private lobby, bay windows, a/c ledges, planters, balconies, roof terraces, outdoor shower and voids where applicable.
All areas and measurements stated herein are approximate and subject to adjustment on final survey. Layout / location of wardrobes, kitchen cabinets, fan coil units, electrical points, door swing positions and plaster ceiling boards are subject to Architect' s sole discretion and final design.

LEEDON RESIDENCE

PENTHOUSE
5 BEDROOM
TYPE PH2

529 sqm / 5,694 sqft

unit 11-22

Mirror Unit
unit 11-21

Upper Level

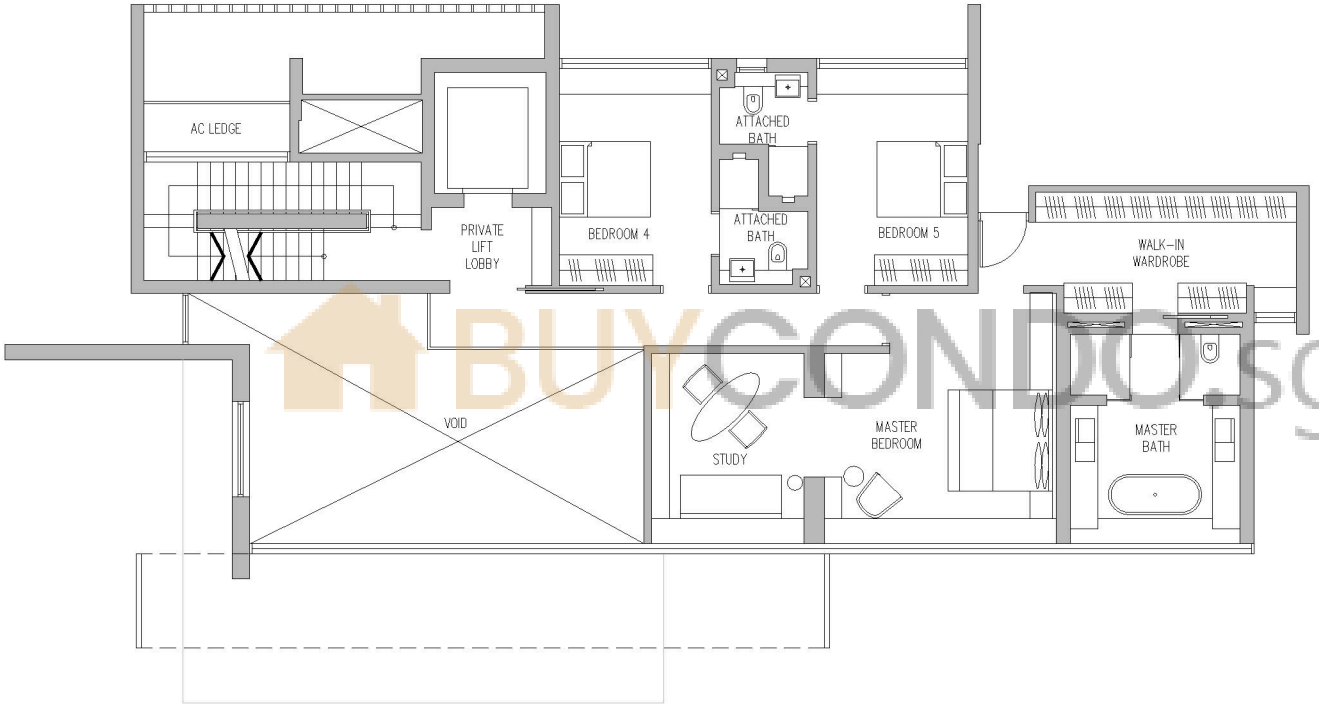

BUYCONDO.sg

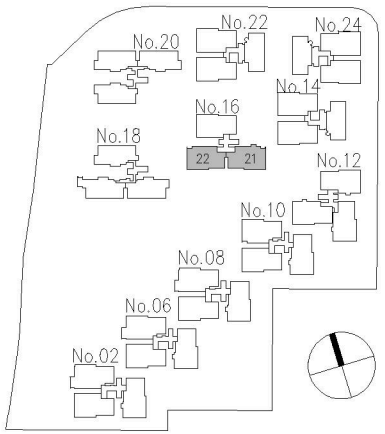

0 1m 2m 5m 10m

BUILDING PLAN REF : A1387-00356-2007-BP01, A1387-00356-2007-BP02, A1387-00356-2007-BP03, A1387-00356-2007-BP04
APRROVAL DATE : 19/04/2011, 25/01/2012, 12/06/2012, 17/12/2013

All areas stated herein include pes, water feature (private pool), private lobby, bay windows, a/c ledges, planters, balconies, roof terraces, outdoor shower and voids where applicable.
All areas and measurements stated herein are approximate and subject to adjustment on final survey. Layout / location of wardrobes, kitchen cabinets, fan coil units, electrical points, door swing positions and plaster ceiling boards are subject to Architect' s sole discretion and final design.

LEEDON RESIDENCE

PENTHOUSE
5 BEDROOM
TYPE PH2

529 sqm / 5,694 sqft

unit 11-22

Mirror Unit
unit 11-21

Roof Garden

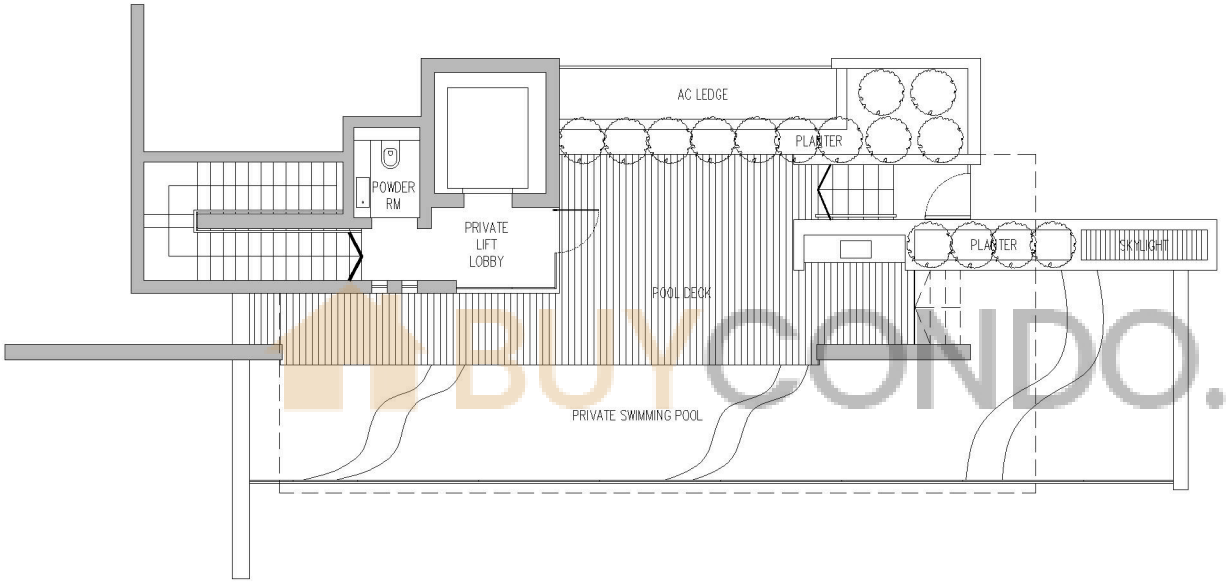

BUYCONDO.sg

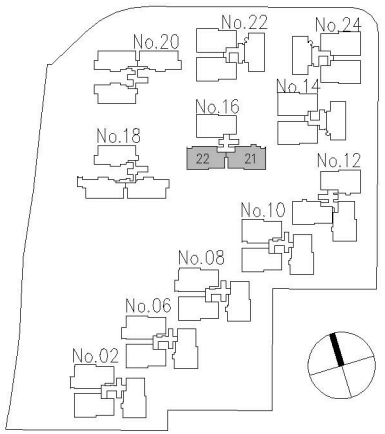

0 1m 2m 5m 10m

BUILDING PLAN REF : A1387-00356-2007-BP01, A1387-00356-2007-BP02, A1387-00356-2007-BP03, A1387-00356-2007-BP04
APRROVAL DATE : 19/04/2011, 25/01/2012, 12/06/2012, 17/12/2013

All areas stated herein include pes, water feature (private pool), private lobby, bay windows, a/c ledges, planters, balconies, roof terraces, outdoor shower and voids where applicable.
All areas and measurements stated herein are approximate and subject to adjustment on final survey. Layout / location of wardrobes, kitchen cabinets, fan coil units, electrical points, door swing positions and plaster ceiling boards are subject to Architect' s sole discretion and final design.

LEEDON RESIDENCE

PENTHOUSE
5 BEDROOM
TYPE PH3-L

717 sqm / 7,718 sqft

unit 11-23

Lower Level

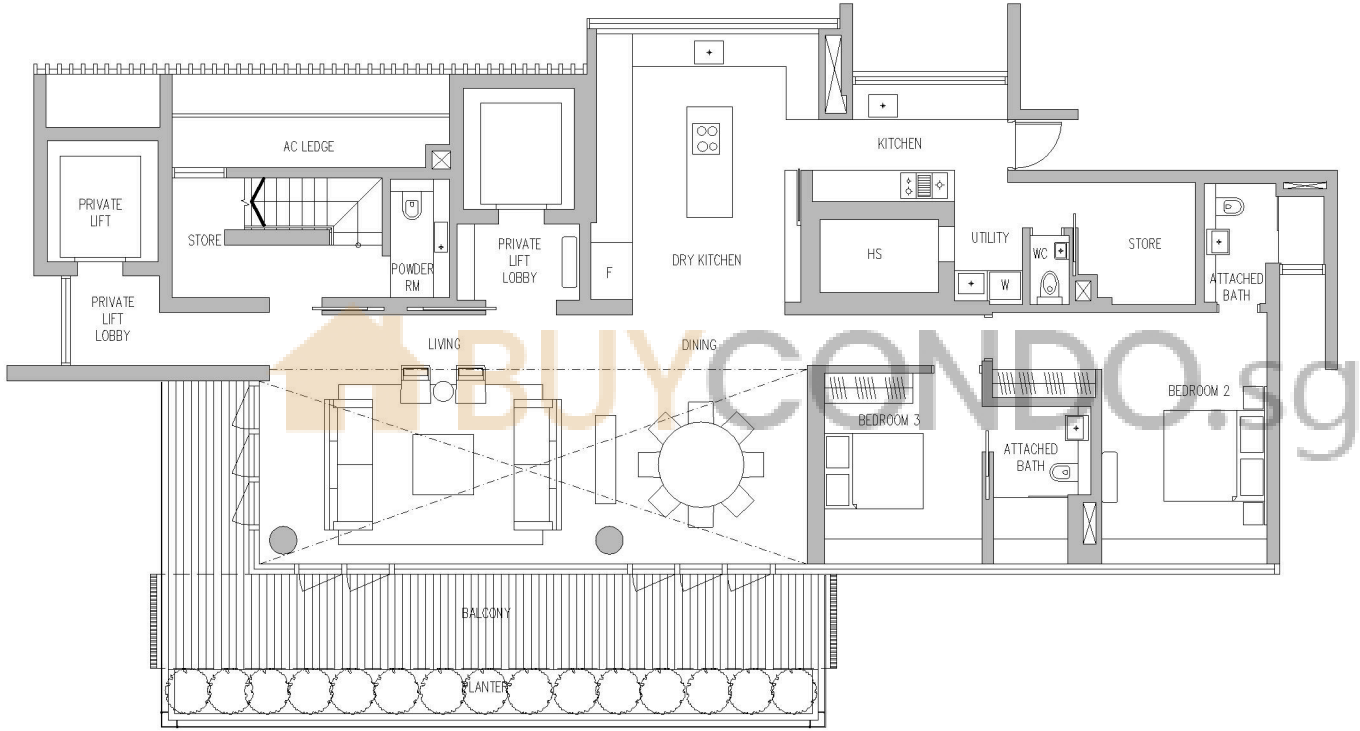

BUYCONDO.sg

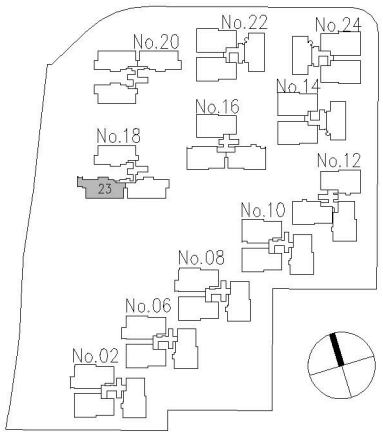

0 1m 2m 5m 10m

BUILDING PLAN REF : A1387-00356-2007-BP01, A1387-00356-2007-BP02, A1387-00356-2007-BP03, A1387-00356-2007-BP04
APRROVAL DATE : 19/04/2011, 25/01/2012, 12/06/2012, 17/12/2013

All areas stated herein include pes, water feature (private pool), private lobby, bay windows, a/c ledges, planters, balconies, roof terraces, outdoor shower and voids where applicable.
All areas and measurements stated herein are approximate and subject to adjustment on final survey. Layout / location of wardrobes, kitchen cabinets, fan coil units, electrical points, door swing positions and plaster ceiling boards are subject to Architect' s sole discretion and final design.

LEEDON RESIDENCE

PENTHOUSE
5 BEDROOM
TYPE PH3-L

717 sqm / 7,718 sqft

unit 11-23

Upper Level

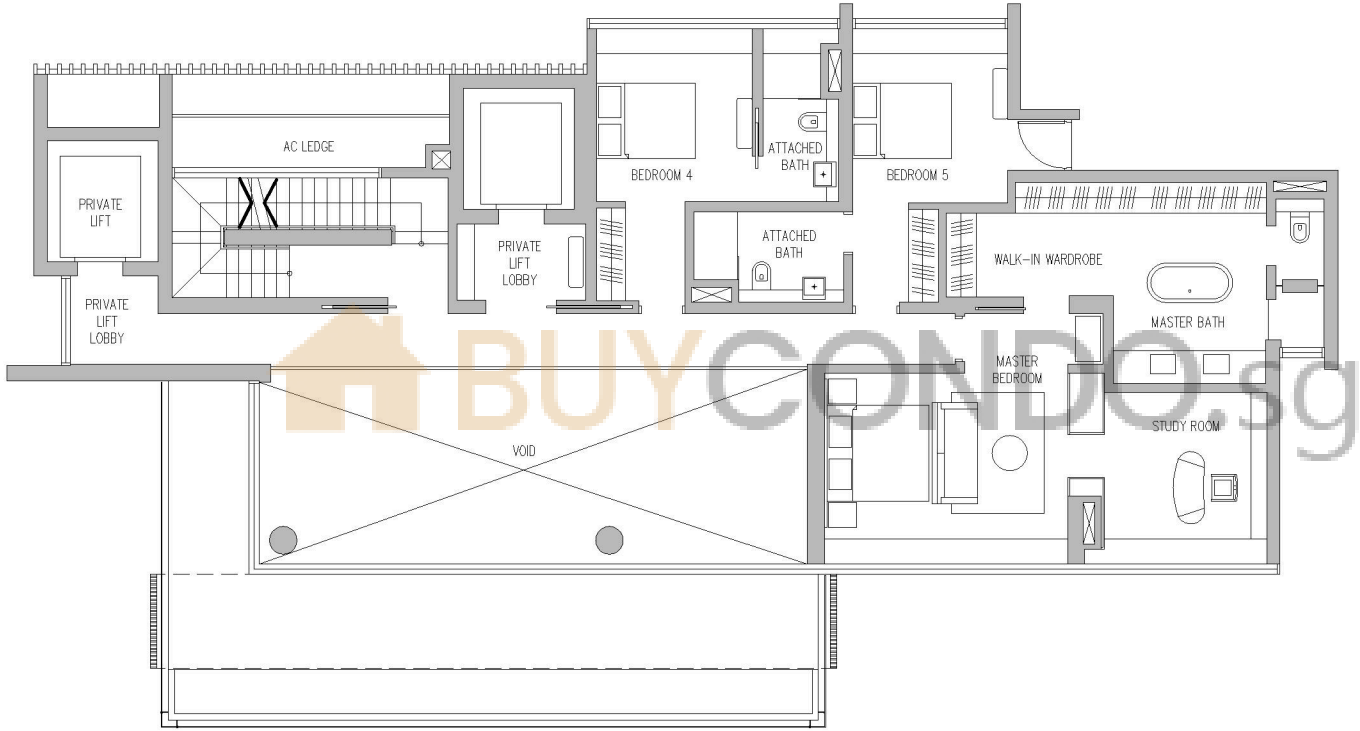

BUYCONDO.sg

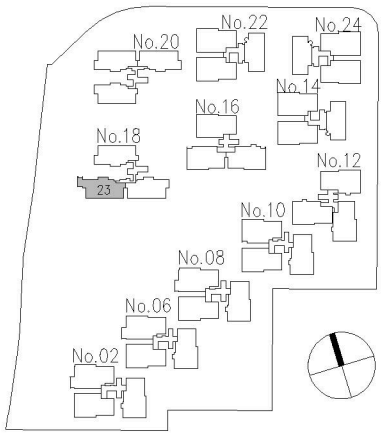

0 1m 2m 5m 10m

BUILDING PLAN REF : A1387-00356-2007-BP01, A1387-00356-2007-BP02, A1387-00356-2007-BP03, A1387-00356-2007-BP04
APRROVAL DATE : 19/04/2011, 25/01/2012, 12/06/2012, 17/12/2013

All areas stated herein include pes, water feature (private pool), private lobby, bay windows, a/c ledges, planters, balconies, roof terraces, outdoor shower and voids where applicable.
All areas and measurements stated herein are approximate and subject to adjustment on final survey. Layout / location of wardrobes, kitchen cabinets, fan coil units, electrical points, door swing positions and plaster ceiling boards are subject to Architect' s sole discretion and final design.

LEEDON RESIDENCE

PENTHOUSE
5 BEDROOM
TYPE PH3-L

717 sqm / 7,718 sqft

unit 11-23

Roof Garden

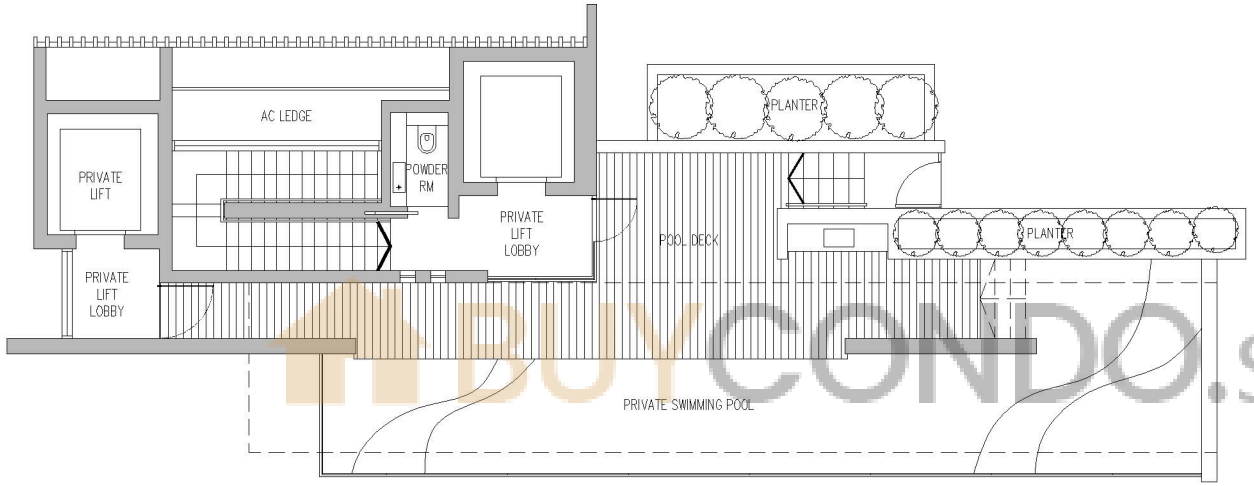

BUYCONDO.sg

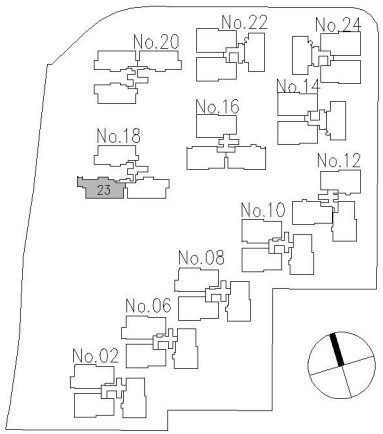

0 1m 2m 5m 10m

BUILDING PLAN REF : A1387-00356-2007-BP01, A1387-00356-2007-BP02, A1387-00356-2007-BP03, A1387-00356-2007-BP04
APRROVAL DATE : 19/04/2011, 25/01/2012, 12/06/2012, 17/12/2013

All areas stated herein include pes, water feature (private pool), private lobby, bay windows, a/c ledges, planters, balconies, roof terraces, outdoor shower and voids where applicable.
All areas and measurements stated herein are approximate and subject to adjustment on final survey. Layout / location of wardrobes, kitchen cabinets, fan coil units, electrical points, door swing positions and plaster ceiling boards are subject to Architect' s sole discretion and final design.

LEEDON RESIDENCE

PENTHOUSE
5 BEDROOM
TYPE PH3

569 sqm / 6,125 sqft

unit 11-24 / 25 / 28

Mirror Unit
unit 11-26 /27

Lower Level

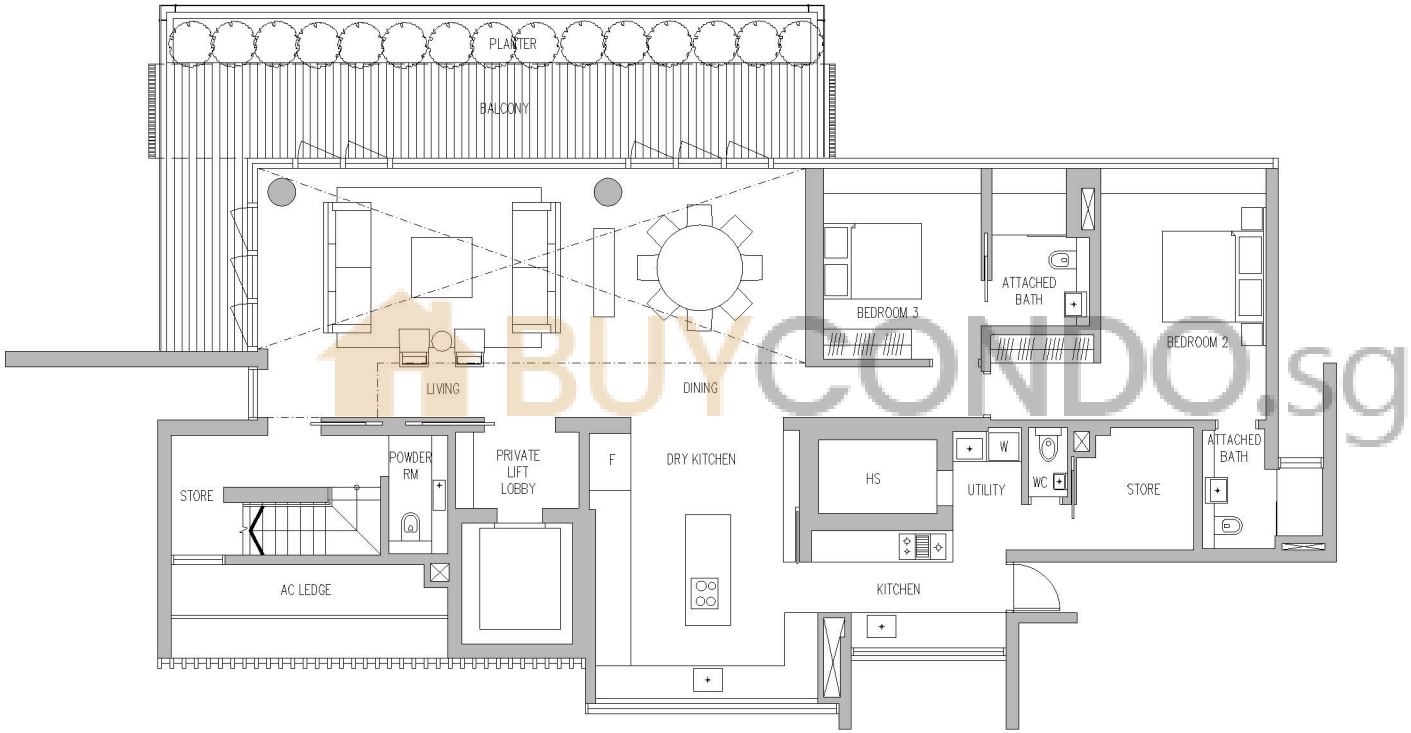

BUYCONDO.sg

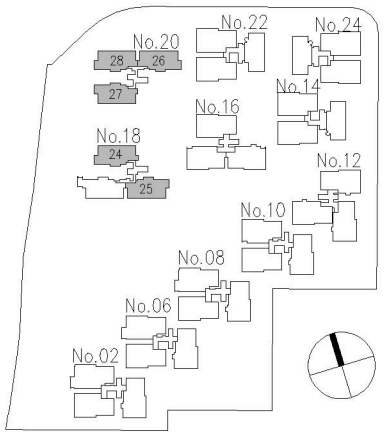

0 1m 2m 5m 10m

BUILDING PLAN REF : A1387-00356-2007-BP01, A1387-00356-2007-BP02, A1387-00356-2007-BP03, A1387-00356-2007-BP04
APRROVAL DATE : 19/04/2011, 25/01/2012, 12/06/2012, 17/12/2013

All areas stated herein include pes, water feature (private pool), private lobby, bay windows, a/c ledges, planters, balconies, roof terraces, outdoor shower and voids where applicable.
All areas and measurements stated herein are approximate and subject to adjustment on final survey. Layout / location of wardrobes, kitchen cabinets, fan coil units, electrical points, door swing positions and plaster ceiling boards are subject to Architect' s sole discretion and final design.

LEEDON RESIDENCE

PENTHOUSE
5 BEDROOM
TYPE PH3

569 sqm / 6,125 sqft

unit 11-24 / 25 / 28

Mirror Unit
unit 11-26 /27

Upper Level

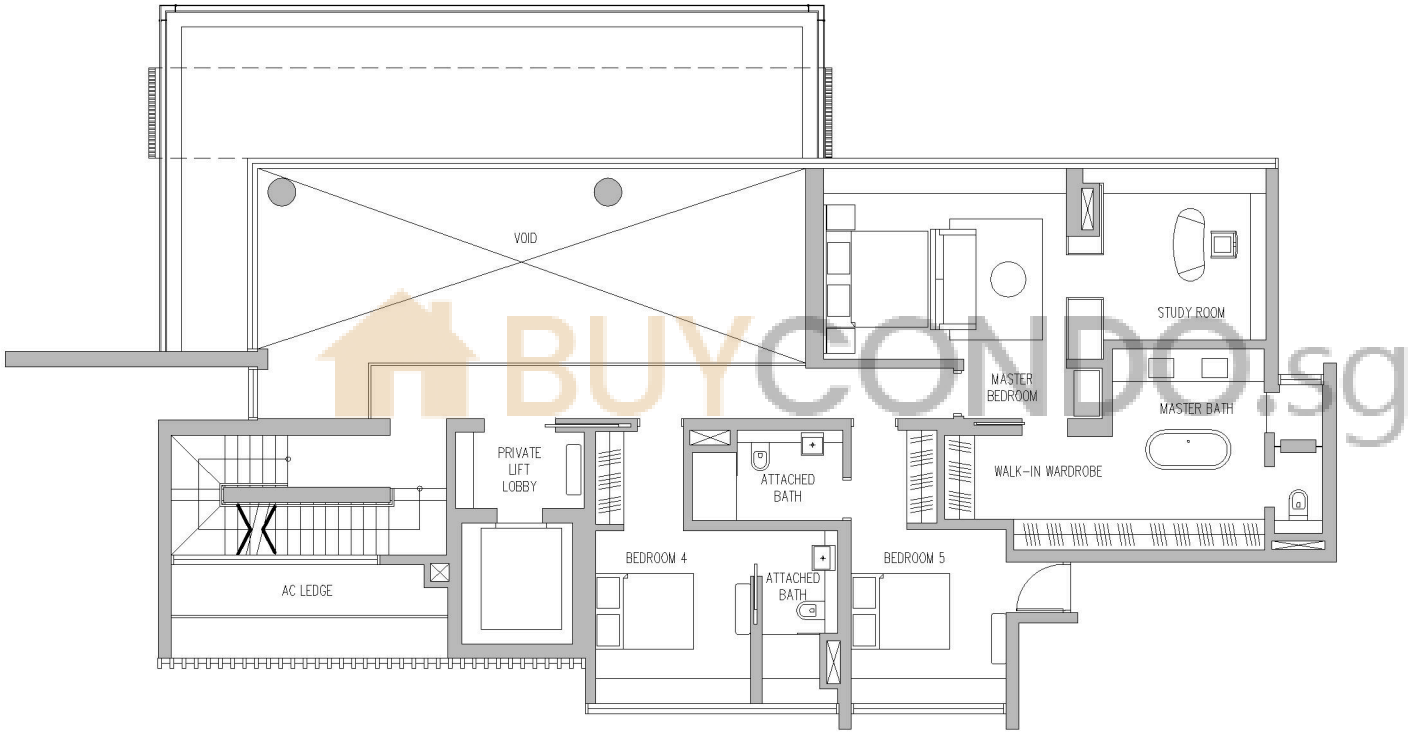

BUYCONDO.sg

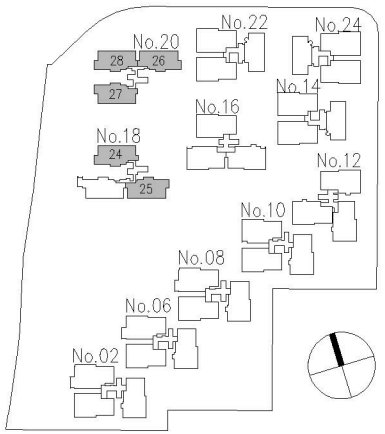

0 1m 2m 5m 10m

BUILDING PLAN REF : A1387-00356-2007-BP01, A1387-00356-2007-BP02, A1387-00356-2007-BP03, A1387-00356-2007-BP04
APRROVAL DATE : 19/04/2011, 25/01/2012, 12/06/2012, 17/12/2013

All areas stated herein include pes, water feature (private pool), private lobby, bay windows, a/c ledges, planters, balconies, roof terraces, outdoor shower and voids where applicable.
All areas and measurements stated herein are approximate and subject to adjustment on final survey. Layout / location of wardrobes, kitchen cabinets, fan coil units, electrical points, door swing positions and plaster ceiling boards are subject to Architect' s sole discretion and final design.

LEEDON RESIDENCE

PENTHOUSE
5 BEDROOM
TYPE PH3

569 sqm / 6,125 sqft

unit 11-24 / 25 / 28

Mirror Unit
unit 11-26 /27

Roof Garden

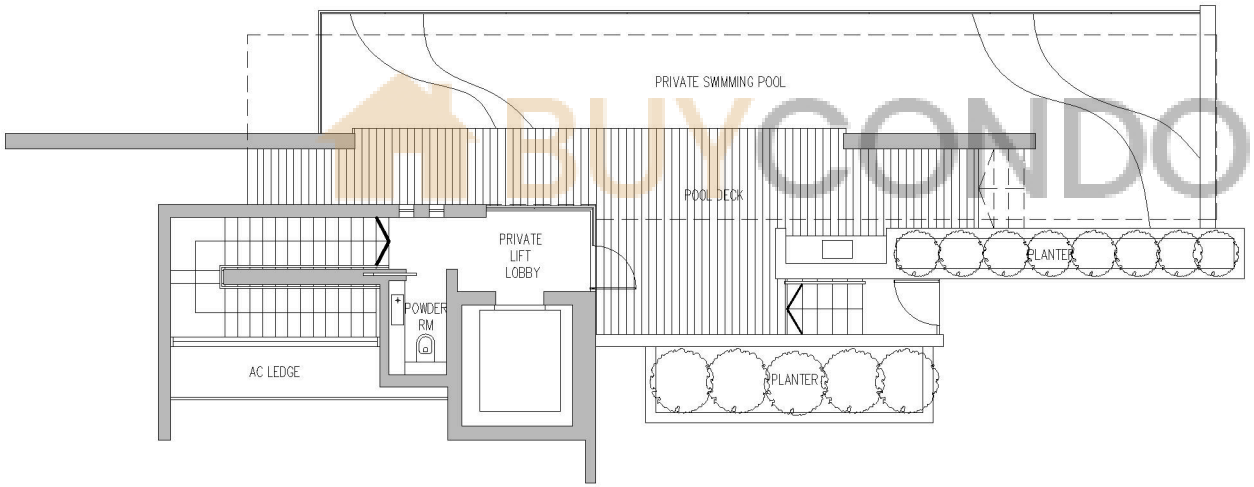

BUYCONDO.sg

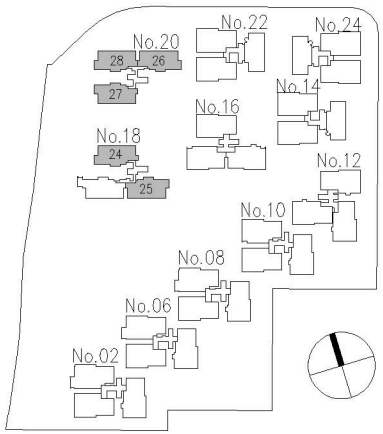

0 1m 2m 5m 10m

BUILDING PLAN REF : A1387-00356-2007-BP01, A1387-00356-2007-BP02, A1387-00356-2007-BP03, A1387-00356-2007-BP04
APRROVAL DATE : 19/04/2011, 25/01/2012, 12/06/2012, 17/12/2013

All areas stated herein include pes, water feature (private pool), private lobby, bay windows, a/c ledges, planters, balconies, roof terraces, outdoor shower and voids where applicable.
All areas and measurements stated herein are approximate and subject to adjustment on final survey. Layout / location of wardrobes, kitchen cabinets, fan coil units, electrical points, door swing positions and plaster ceiling boards are subject to Architect' s sole discretion and final design.